PHYSIOLOGICAL SYSTEMS OF THE BODY:

Human body is a complex engineering marvel, which contains various types of the systems

1* THE CARDIO-VASCULAR SYSTEM: The cardiovascular system is a complex closed hydraulic system, which performs the essential service of transportation of oxygen, carbondioxide, numeorous chemical compounds and blood cells.

structurally its devided into right & left parts

Each parts has two chambers Atrium & ventricle.

The heart has 4 valves.

* The tricuspid valve (OR) right atrio - ventricular valve
  - between right atrium & right ventricle.
  - consists of 3 flaps (OR) cusps.
  - prevents backward flow of Blood from right ventricle to right atrium.

* Bicuspid Mitral (OR) left atrio - ventricular valve
  - ~~x~~ left atrium & left ventricle.
  - has two flaps (OR) cusps
  - prevents backward flow of blood from left ventricle to atrium.

* pulmonary valve:
  - at right ventricle.
  - consist of 3 ~~½~~ half moon shaped cups
  - does not allow blood to come back to the right ventricle.

* Aortic valve:
  - between (><) left ventricle & aorta
  - construction is like pulmonary valve.
  - prevents the return of blood back to the left ventricle.

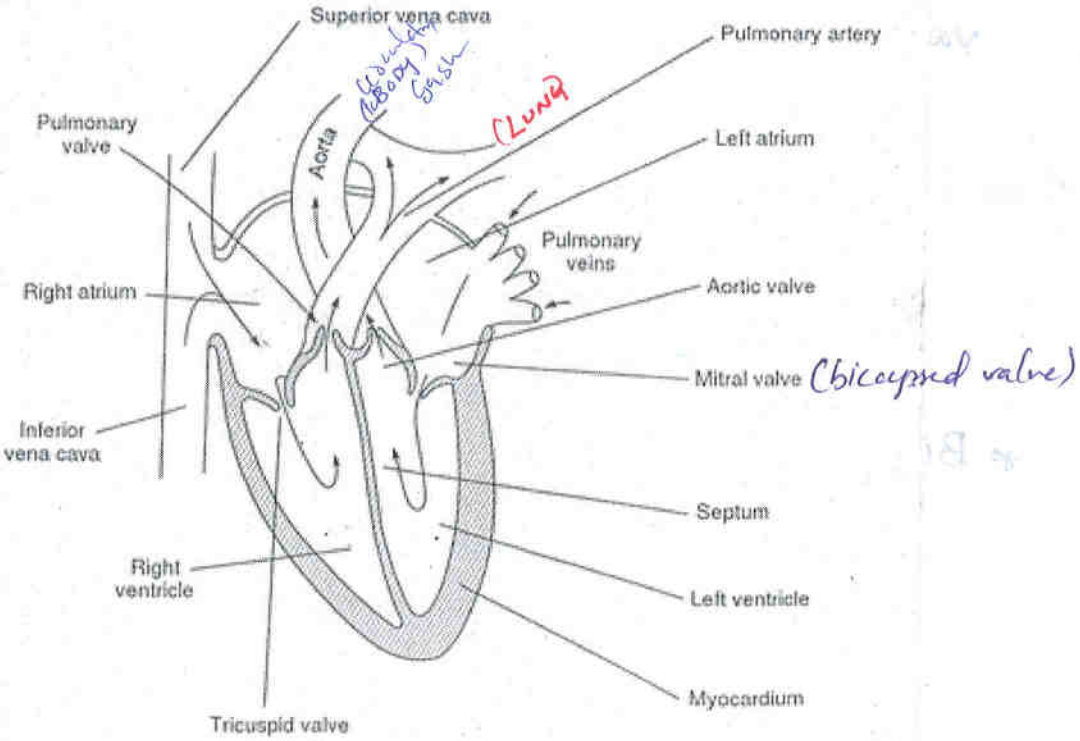

Structure of the heart

Structure of heart:

* The heart wall consists of 3 layers:

(i) ~~The~~ pericardium:-

(ii) myocardium

(iii) endocardium.

The pericardium:

- outer layer of the heart
- it keeps the outer surface moist & prevent friction as heart beats

The myocardium:

- middle layer
- main muscle of the heart which is made up of short cylindrical fibers. Its automatic in action. Contracting & ~~expanding~~ relaxing rythemically tha' out the life

The endocardium:

- inner layer of the heart
- provides smooth lining for the blood to flow

* Blood vessels:

- hollow tubes
- blood is carried to various parts of the body tha' blood vessels.

There are 3 types of blood vessels.

(i) Arteries
(ii) veins
(iii) capillaries

Arteries:
- Thick walled & carry the oxygenated blood away from the heart.

Veins:
- are thin walled & carry the de-oxygenated blood towards the heart.

Capillaries:
- Smallest & the last level of blood vessels.
- 80,000 km of capillaries in human which include all arteries & veins.
- blood cells which make blood flows ONE at a time.

HEART:
which drives blood thr' the blood vessels of the circulatory system. - consists of 4 champers
- muscular pump that beats about 72 times / minutes
- sending blood thr' every part of the body.
- The heart pumps the blood thr' pulmonary circulation to the Lung & thr' the systemic circulation to the other part of the body

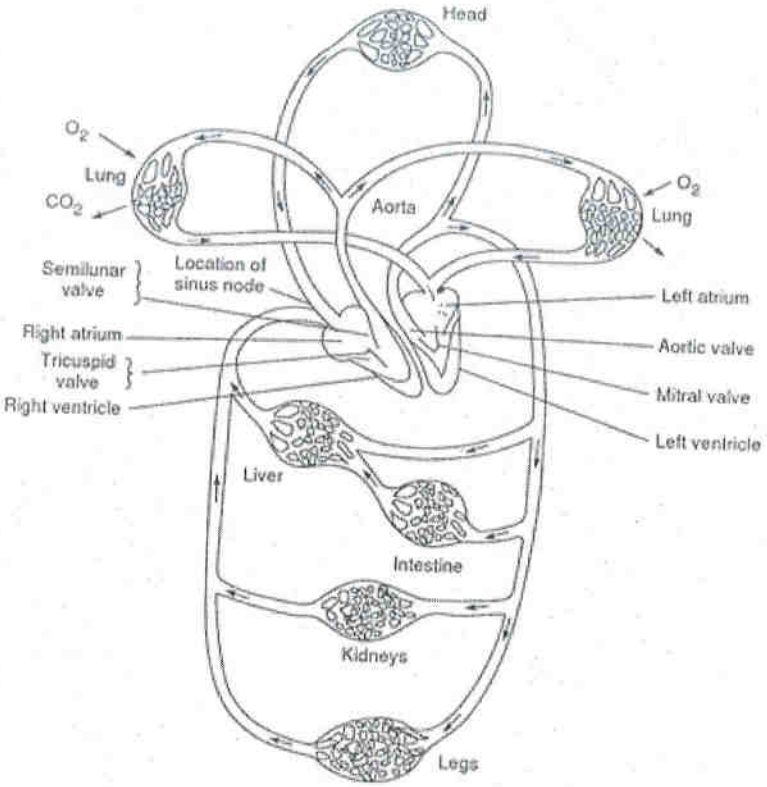

The Circulatory system

The circulatory system:

The circulatory system :- is the transport system of the body by which food, oxygen, water, and other essentials are transported to the tissue cells and their waste products are transported away.

— This happens the diffusion process. ie nurishment ~~the~~ from the blood ~~tissue~~ cell diffuses the the capillary wall ~~of the~~ into the interstitial fluid. Illy carbon dioxide & other waste products from interstitial fluid diffuses the the capillary wall into the blood cells.

— ~~pulm~~ Heart pumps the blood the pulmonary & systemic circulation.

pulmonary circulation: The venous (deoxigenated) blood flows from the right ventricle the' the pulmonary artery to the lung - where it is ~~oxygenatald~~ oxygenated and gives off CO_2.

- The arterial (oxygenated) blood then flows the the pulmonary veins to the left atrium.

Systemic circulation: The blood is forced the' the blood vessels - which are some what elastic - The blood flows from left atrium to left ventricle and is pumped the' the aorta & its branches, the arteries out into the body.

- The' small arteries the blood is distributed to the capillaries in the tissues where its gives up oxygen & other compounds takes up CO_2 & products of combustion.

02/08/17

2* THE RESPIRATORY SYSTEM: (3rd mod: in detail)

Respiratory system in human body is a pneumatic system in which an air pump (diaphram) alternatively creates +ve & -ve pressure in a sealed chamber (thoracic)

Nasal cavities :- lungs are connected to the outside enviorment thr' a passage way.

- carries air into each lungs.
- oxigen is taken into the blood from the incoming air & CO_2 is transferred from the blood to air under the control of pneumatic pump.
- the movement of gas x blood and tiny air spaces (~~alvelor~~ alveoli) is due to diffusion.
- and achieved by 15-20 breaths/min - each one with 500 ml.
- under normal condition 250 ml of O_2 are taken up & 250 ml of CO_2 is given out

The Respiratory system:

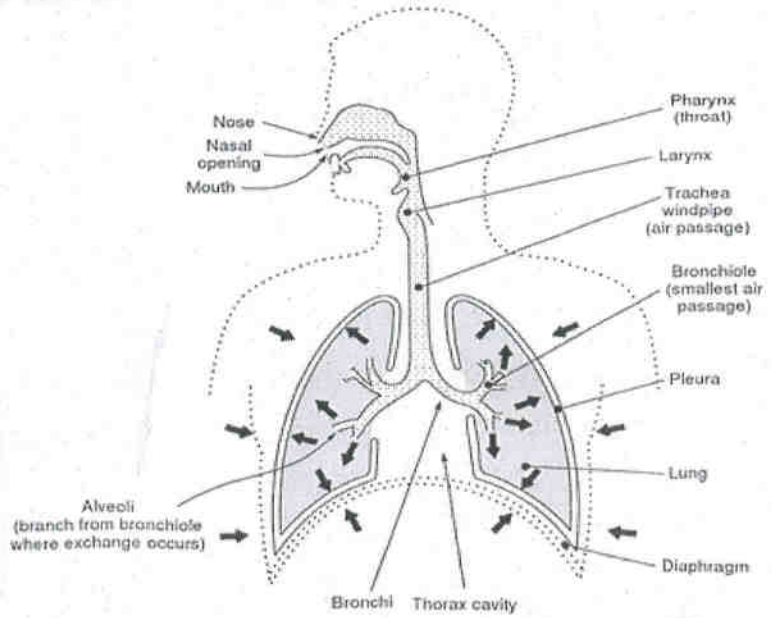

The Respiratory system

3* Nervous System:

The nervous system is the control & communication N/w for the body which coordinates the functions of the various organs.

It consist of a central & a peripheral parts.

Central nervous system: is made up of the brain & (encephalon) and the spinal cord.

Peripheral nervous system: comprises all the nerves & gp. of neurons outside the brain the spinal cord.

The brain consists of three parts

* cerebrum
* cerebellum
* brain stem

~~Ceb~~

Cerebrum:

- consists of two well demarcated hemispheres, right & left &
- each hemisphere is sub-divided into two lobes frontal lobe & temporal lobe in the left hemisphere & parietal & occipital lobes in the right hemisphere.

- The outer layer of the brain is called cerebral cortex.

- All sensory i/ps from various parts of the body reaches the cortex.
- its also the centre of intellectual functions.

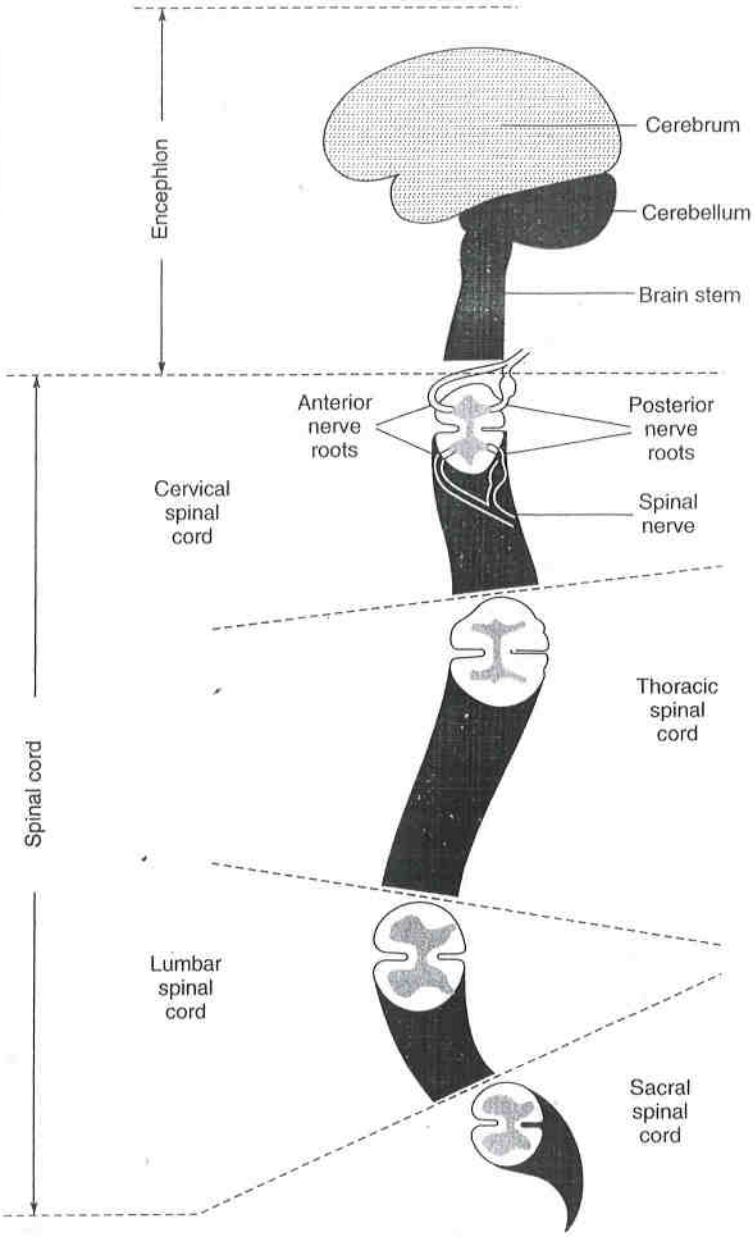

➤ Fig. 1.4 *Central nervous system, human brain and spinal cord*

Central nervous system, human brain & spinal cord.

- The temporal lobes are also importantance for the storage process - in the long term memory.

Cerebellum:

- The cerebellum acts as a physiological ~~micro controller~~ micro computer which intercepts various. sensory & motor nerves to

to smooth out the muscle motions

- It also consists of two hemispheres which regulates the coordination of muscle movements elicited by cerebrum.
- it also enables a person to maintain his balance

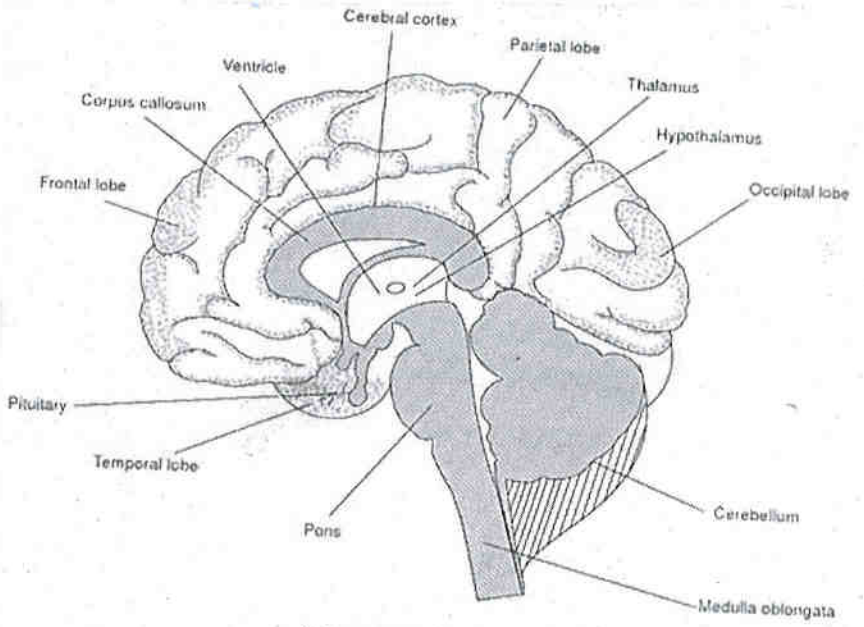

Cut-away section of the human brain

cut away section of the human brain

Brain stem : - connects the spinal cord to the centre of the brain just below the cortex.

- The essential parts of brain stem are

* medulla oblongata
* pons
* mid brain
* diencephalon — thalamus, hypothalamus

(i) medulla oblongata:

- lowest section of brain stem
- contains centres for regulating the work performed by heart; control blood distribution (vasomotor centre) & respiratory centre - Controlls ~~the~~ the ventilation of the lungs.

(ii) pons:

- located just above the ~~the~~ medulla & protruding some what in front of the brain stem.

(iii) mid brain

- lies in the upper part of the brain stem

(iv) diencephalon:

- above and slightly forward of the mid brain

* one part is Thalamus: - act as ~~relaying~~ Relay station for sensory pathways to the cortical sensory centre of the ~~cent~~ cerebrum.

* In the lower part of diencephalon is hypothalamus
- which is the centre for temparature regulation, metabolism, & fluid regulation

Spinal cord:

- The spinal cord is a downward continuation of the medulla oblongata ~~to~~ in the

brain to the level of first lumbar verteba.

- consists of cylinder of nerve tissue (thickness 38-45cm)
- cord consists of white matter on the surface & gray mater inside.

- White matter :- contains fibers ~~running~~ x ~~fibers~~ brain & cord only.
  - cord containing motor & sensory fibers & is responsible for reflex action & link x body & brain
- gray matter:
  - 'H' shaped gray matter
  - controls many reflexes - knee reflex, bladder emptying reflexes.

Central nervous system consists of billions of specialized cells, about half is called - neurons.

- are functionally active as signal txers
- fundamental property is to transmit electrical signals called nerve impulses (stimuli)

Other half is called - supporting cells, which

- maintain & nourish the neurons.

Centre Nervous System } controls the voluntary muscles of the body & is responsible for the movements of the sensations.

Neuron: - Refer mod: 3.
- The basic functional unit of centre nervous system

- it consists of a nucleated cell body & has several branches.

- The branches are called axone & dendrite.

* Dendrite :- normally conduct impulses towards cell body

* Axone :- conduct away from the body

- over all size of the neuron is mm to meter.

- Nervous system is the principal regulatory system.

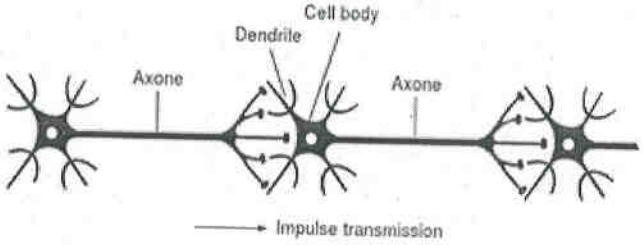

Structure of the neuron and the phenomenon of impulse transmission

structure of neuron & phenomenon of impulse txion/.

BIOMEDICAL INSTRUMENTATION SYSTEM:

- The primary purpose of medical instrumentation is to measure (OR) determine the presence of some physical quantity that may assist medical personnel to make better diagnosis & treatment.
- Any medical instrument consists of 4 basic components.

* Measurand:

The physical quantity (OR) conditions that the instrumentation system measures is called measurand.

- Source for measurand is human body

** Transducer / Sensor:

Tranducer:- Converts one form of energy to another.

- 1° function of the transducer is to provide a usable output in response to the measurand.

Sensor:-

- Also used in medical instrumentation system
- Sensor converts physical measurand to an electrical signal.

*** Signal conditioner:

- converts o/p of transducer to an electrical quantity suitable for the operation of display (OR) recording system.

- may ~~be~~ vary in complexcity from simple resistant N/w to complex electronic ckts.

**** Displaysystem:

- visible representation of the quantity as a displacement on screen (or) chart of recorder

The processed signal after signal conditioning may be passed on to

Alarm system: - with upper & lower threshold to indicate when measurand goes beyond limits (preset)

Data storage: - To maintain data for future use. (reference)

Data Txion: - using std interface connections - informations obtained may be transmitted from one location to another.

Calibration: - is necessary at regular intervals.

- usually calibration signal applied to sensor o/p (OR) early in signal conditioning chain as possible.

Measurements in medical feild can be classified into two types invivo and in vitro.

Invivo measurement: - made on (OR) with in the living organism itself.

Eg: pressure measurement in heart chamber

Invitro measurement: - performed outside the body

Eg: blood glocose level measurement.

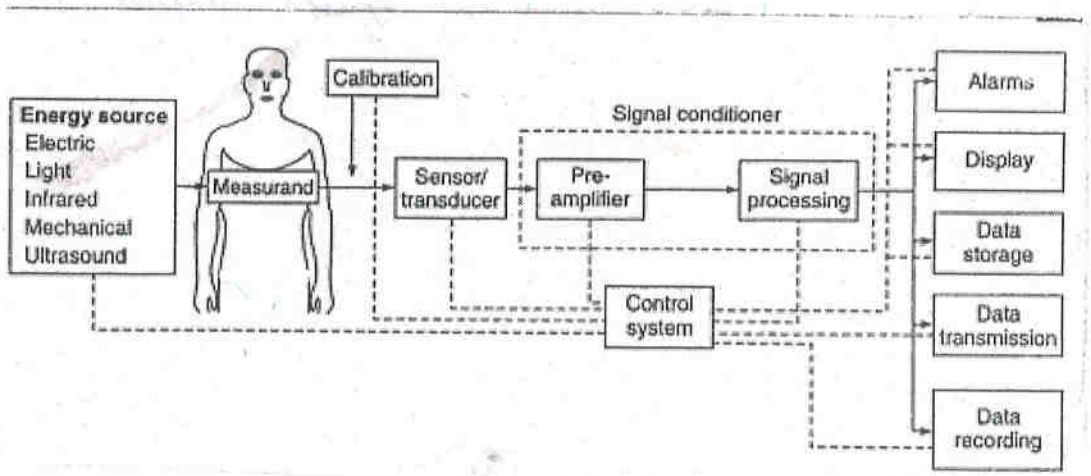

General block diagram of a medical Instrumentation system:

SOURCE OF BIO ELECTRIC POTENTIAL

07/08

Surrounding the cells of the body are body fluids, which are ionic & which provide conducting medium for electric potentials. The principal ions involved with the phenomena of producing cell potentials are Na^+, K^+ and Cl^-.

The cell is surrounded by a semi permeable membrane, which act as a selective filter to the ions.

BIOELECTRIC POTENTIAL.

Certain systems of the body generates their own monitoring signals while carrying out their function. These signals are called bioelectric potentials.

These are generated due to nerve conduction brain activity, heart beat. muscle activity.

Hence the ionic voltages produces as result of electrochemical activity are known as. bioelectric potential

RESTING POTENTIAL:

In the normal state, the membrane of excitable cells readilly permits the entry of K^+, & Cl^- ions, but prevent impedes the flow of Na^+ ions even though there may be very high concentration

gradiant of Na^+ ions across the cell membrane. This results in concentration of Na^+ ions more in the outside of cell membrane than on the inside. Since Na is a +ve ion in its resting state, cell has a -ve charge ~~on~~ along the inner surface & +ve charge on the outer portions & ~~This~~ The potential measured is called Resting potential (This unequal charge distribution is a result of certain electrochemical reactions).

- And the cell is said to be polarized. [The cell in the resting state is said to be polarized]
- Resting potential (membrane) is about -90mv.

ACTION POTENTIAL:

2.3.2. Action Potentials

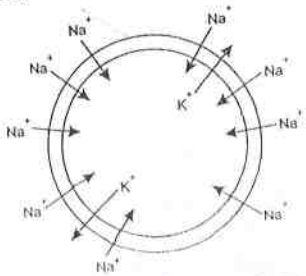

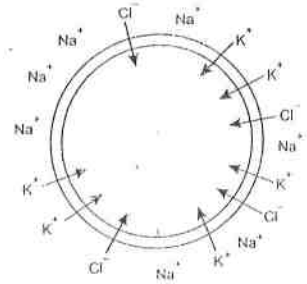

Fig. 2.3. (a) Nerve and muscle cells are encased in a semipermeable membrane. Sodium ions (Na^+) are unable to penetrate

Resting potential (fig:)

Fig :- Action potential :

When the cell is excited (or) stimulated (by the flow of ionic ct' (OR) by some form externally applied energy), - the membrane change its charac and begans to allow some of the sodium ions to enter. At the same time K^+ ions which were in higher concentration inside the cell during the resting state try to leave the cell. - As a result

The cell has a slightly +ve potential inside ~~has~~ due to imbalance of K^+ ions. This potential is called action potential

When the cell is excited (OR) stimulated, the cell membrane begins to allow some of the Na^+ ions to enter. ~~And~~ As a result the cell membrane is momentarily −ve w.r.to interior. This potential is called - ACTION POTENTIAL. And the cell is said to be Depolarized.

- Action potential is approximately +20mv
- The process of changing from resting state to action potential is called DEPOLARIZATION.
- By an active process called sodium pump, the sodium ions are quickly transported to outside of the cell and the cell again becomes polarized and resumes its resting potential. This process is called REPOLARIZATION.
- Action potential is same always for any given cell. This is known as all - OR - nothing law
- Following the generation of an action potential there is a brief period of time during which the cell can't respond to any new stimulus. This period is called ABSOLUTE REFRACTORY PERIOD last for 1msec in nerve cells.

~~Electrical activity associated with one contraction in a muscle.~~

- Following the absolute refractory period there occurs a Relative Refractory period during which another action potential can be triggered, but much stronger stimulation is required.
  - it lasts for several milliseconds.

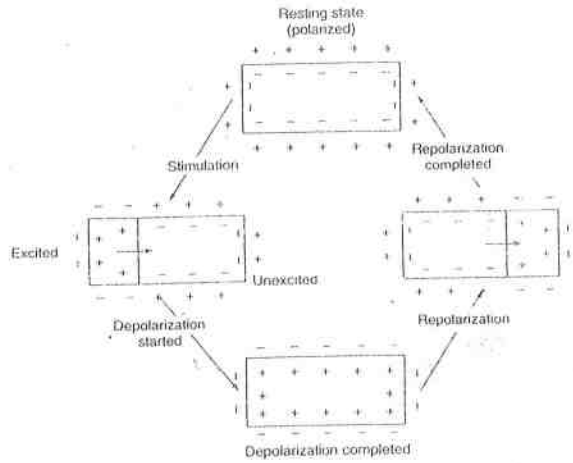

Fig. 2.2 *Electrical activity associated with one contraction in a muscle*

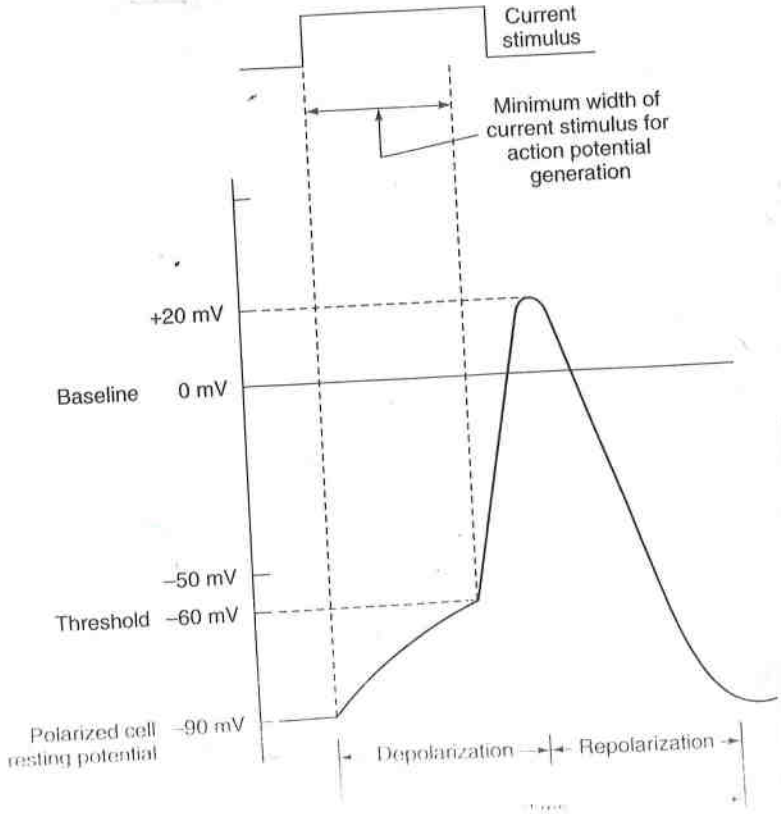

Cell potential wave form.

PROPAGATION OF ACTION POTENTIAL:

When a cell is excited and generates an action potential, ionic currents begins to flow, this can inturn excite neighbouring cells (OR) adjacent areas of the same cells.

In the case of nerve cells with a long fiber the action potential is generated over a a very small segment of the fibers length but its propagated in both directions from the original pt. of excitation. As action potential travells down the fiber it can't reexcite the portion of the fiber immediately upstream due to refractory period that follows action potential

~~The rate at which~~

- The rate at which action potential moves down a fiber (OR) is propagated from cell to cells is called propagation rate.

- In nerve fibers the propagation rate is also called the nerve conduction rate (OR) conduction velocity

- This velocity varies widely with type & diameter of the nerve fiber

- usual velocity range in nerves is from ~~20 to 40~~ 20 - 140 meters per second

- propagation the heart muscle is 0.2 to 0.4 m/sec

BIOELECTRIC POTENTIAL — [ECG, EEG, EMG, ERG, EOG, EGG] -

wave forms ends with suffix — gram.
The Instrument name ends with " — graph.
eg: Electro cardio gram ⇒ wave form (heart)
Electro cardio graph ⇒ Instrument.

ECG: — ELECTRO CARDIOGRAPH (details are in mod-II)

- The biopotential generated by the muscles of the heart results in ECG.

- (Explain cardiovascular system)

- SA Node:- Each action potential in the heart originates near the top of the right atrium at apt called pace maker (SA node) or Sinoatrial Node (SA Node) act as pacemaker

- pacemaker:- is a gp of specialised cells that spondaneously generates action potentials at a regular rate.

- To initiate heart beat, the action potential generated by the pacemaker propagates in all directions along the surface of atria towards the junction of atria & ventricle.

- The wave terminates at a pt near the centre of heart called Atrioventricular node (AV Node)
- Some spl fibers act as delay line to provide proper timing between the action of atria & ventricles
- Once the electrical excitation has pass the the delay line its rapidly spread to all parts of ~~the~~ both ventricles ~~call~~ the bundle of His
- The fibers in the bundle called purkinje fiber devided into two branches to initiate action potential in two ventricles.
- The wave ~~front~~ in the ventricle terminate at the tip (OR) apex of heart.
- wave ~~depto~~ depolarization & depolarization occurs x 0.2 to 0.4 second.

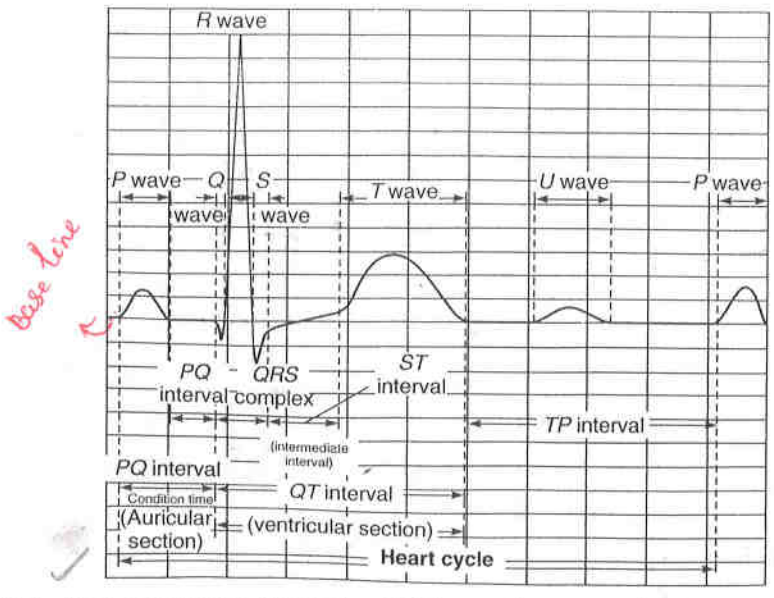

Fig. 2.4 *Normal wave pattern of an ECG waveform recorded in the standard lead position*

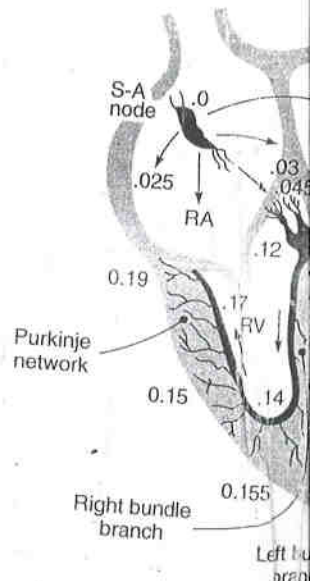

Fig. 2.3 *The position of the sino-atrial n sponsible for the electrical activi the path of the impulse.*

Note: The numbers like 0.18, 0.15 the impulse to travel from the S-A

Electro cardiogram wave form (ECG)

- The different parts of ECG.
- The horizontal segment of the wave-form preceding the P wave is called Base line (OR) isopotential line.
- P wave :- rep: the depolarization of the atrial musculature.
- QRS complex - is the combined results of repolarization of atria & depolarization of ventricles which occur almost simultaneously → 0.05 to 0.10 sec)
- T wave :- rep: the repolarization of ventricle.
  - Resting period (OR) refractory period.
- U wave (if present) result of after potentials in the ventricular muscle.
- P-Q interval :- rep the time during which the excitation wave is delayed in the fiber near the AV node.
- The shape & polarity of each of these features vary with the location of measuring electrodes w.r.to the heart.

* PR:-interval lies ≈ 0.12 to 0.2 sec
* QRS :- " 0.05 to 0.10 sec; & ampl: is 1mV.

QT interval :- period for one complete ventricular contraction (systole)
- Ventricular diastole starting from the end of the T wave extend to the begining of next Q wave.

ELECTRO ENCEPHALOGRAM (EEG)

- Bio electric potential generated by the neuronal activity of the brain is called EEG.
- EEG varies with the location of measuring electrodes at the surface of the scalp.
- Neurons are electrically polarized at rest.
- Interior of the neuron is at a potential of -70mV relative to the exterior.
- When a neuron is excited with a stimulus above the threshold, a nerve impulse is generated which spreads in the cell resulting in the depolarization of the cell, then repolarization occurs.
- EEG signal is picked with electrodes either from the scalp or directly from the ~~co~~ cortex.
- The ~~peak~~ amplitude of the waves from the scalpe is normally 100 μV & an exposed brain is about 1mV.
- Frequency range is 0.5 to 50Hz
- EEG frequency range is classified into the following 5 bands for the purpose of analysis.

Delta (δ) - 0.5 - 4 Hz

Theta (θ) - 4 - 8 Hz

Alpha (α) - 8 - 13 Hz

Beta (β) - 13 - 22 Hz

Gamma (γ) - 22 - 30 Hz

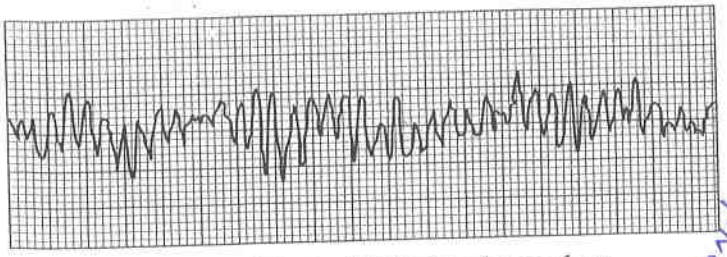

> Fig. 2.5 *Typical EEG signal waveform*

KIONOS

EEG wave form..

Theta (θ) & Delta (δ) :- strongest & indication of sleep.

Alpha (α) :- drowsy person

- principal component of EEG
- its an indicator of state of ~~other~~ ALERTNESS of the brain
- an indicator of the depth of anasthesia in the operating room.
- The frequency of the EEG seems to be affected by the mental activity of a person
- α pattern is ~~produced~~ generated when a person is relaxed with their eyes closed.. form of synchronization

Beta (β) :- Paradoxical sleep, Rapid eye movement (wakefulness)

- when a person is alert (OR) begins thinking α disappears and is replaced by desynchronized pattern.

γ- gama :- results from attention (OR) sensory stimulation

- Another form of EEG measurement is evoked response
  - * This is a measure of the Disturbance in the EEG pattern that results from external stimulii

Delta ⇒ Deep sleep

Theta ⇒ Fall asleep

⊛ ELECTROMYOGRAM (EMG).

- The bioelectric potential associated with muscle activity ~~results~~ constitute EMG.
- measured at the surface of the body near a muscle (or) directly from the muscle by penetrating the skin with needle electrodes.
- EMG electrodes picks up potentials from all muscles with in the range of electrodes.
- Action potential of a given muscle has a fixed magnitude regardless of the intensity of the stimulus
- Amplitude of EMG wave form is the instantaneous sum of all the action potentials generated at any given time.
- In a relaxed muscle there is no action potential

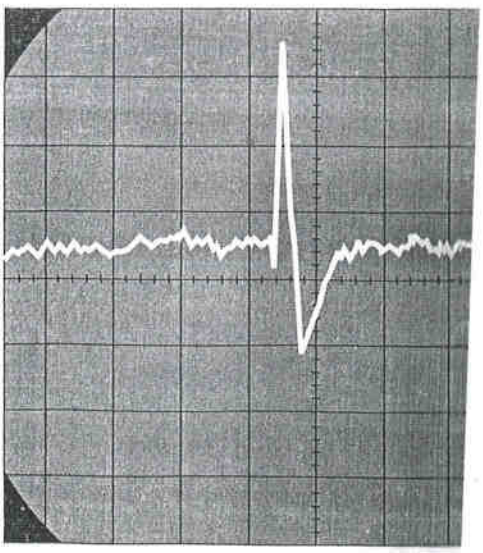

➤ Fig. 2.6 *Waveshape of a typical*

EMG wave form.

ELECTRORETINOGRAM (ERG)

- Bio electrical potential obtained from retina of the eye (front & back of human eye).
- usually response to the visual stimulus

ELECTRO OCULOGRAM (EOG)

- A measure of the variations in the corneal retinal potential as affected by the position & movement of the eye.

ELECTROGASTROGRAM (EGG).

- Associated with the peristaltic movements of the gastro intestinal tract.
- electric signals from stomach & intestines.

ERG:- Two components measured are a & b waves.

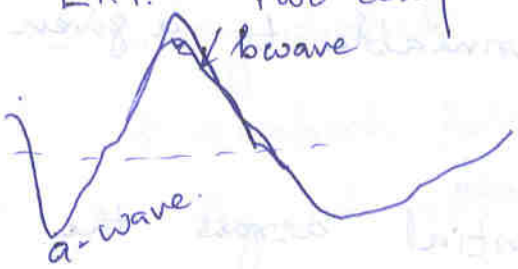

a-wave - is the first large -ve component followed by the b-wave which is corneal positive and usually larger in amplitude.

* when light falls on photo receptors outer portion of photo receptor becomes +ve and inner part become -ve.
* a-wave - reflects the potential of photo receptors in outer retina.
* b-wave - Reflects the function of the inner layers of the retina.

08/08

ELECTRODE THEORY :- ~~NERNST~~

NERNST RELATION:

The interface of metallic ions in solution with their associated metals results in an electrical potential is called Electrode potential.

- This potential is the result of diffusion rate difference ions into & out of the metal.

- Another source of an electrode potential is the unequal exchange of ions across the membrane, which is semi permiable to a given ion.

- An equation relating the electrode potential across the membrane & the two concentration of ions called the Nernst equation.

at 25°c (room temp)

$\frac{RT}{F}$ treated as const

25.693 mv

$$E = -\frac{RT}{nF} \ln \frac{C_1 f_1}{C_2 f_2}$$

where
E ⇒ cell potential
R ⇒ gas constant 8.315 × 10^7 ergs / mole / °k
T ⇒ absolute temp: (degree kelvin)
n ⇒ value of the ions (no: of e^-s)
F ⇒ Faraday constant (96,500 coulombs)
C_1 ; C_2 ⇒ two concentrations of ions on the two sides of membrane.

$f_1, f_2 \Rightarrow$ respective activity constant coeffnt: of the ion on the two sides of the membrane.

f_1 & $f_2 \Rightarrow$ depend on charges of all ions in the solution & distance ~~x~~ ions.

product
$c_1 f_1 \Rightarrow$ activity of ions responsible for electrode potential.

Nernst Equation:
Electrode potential across the membrane is proportional to the log (of the ratio of the activity of the subject ions on the two sides of the membrane.)

- In very dialute solution activity coeffnt $f \simeq 1$ (unity) & electrode potential is the function of the log of the ratio of the two concentrations.

BIOPOTENTIAL ELECTRODES:

A wide verity of electrodes can be used to measure bio electric events, but basically there are 3 basic types.

1* Micro electrodes: - used to measure bispotential near (OR) with in a ~~sig~~ single cell.

2* skin surface electrodes: used to measure ECG, EEG, EMG from the surface of the skin.

3* Needle electrodes: used to penetrate the skin to record EEG ~~Record EEG~~ from brain & EMG from spl: gp of muscles.

- All three types of biopotential electrodes have metal - electrolyte interface.
- The equivalant ckt of biopotential electrode in contact with body consists of a voltage in series with a resistance - capacitance n/w of the type

Ehc - ½ cell potential
Cd & Rd are the components that present in the impedance associated with electrode - electrolyte

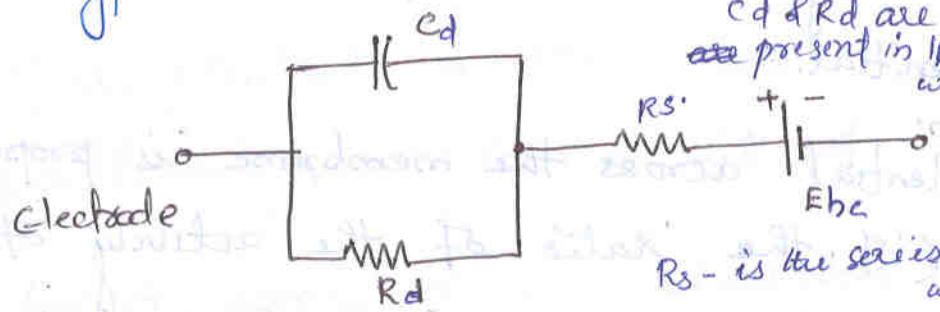

Rs - is the series resistance associated with electrode material

Equivalant ckt of bioelectric potential electrode interface.

Refer KTU Notes

- bioelectric potential is measured by the diff: the instantaneous potential of the two electrodes.
- it required two electrodes.
- The dc voltage due to the difference in electrode potential is called electrode offset voltage
- Resister R_1 & capacitor C_1 are the results of the effects at the electrode cell interface and are frequency dependant. These value fall of at the rate of $1/(2\pi F)^2$ and are generally lower than R_s & C_2

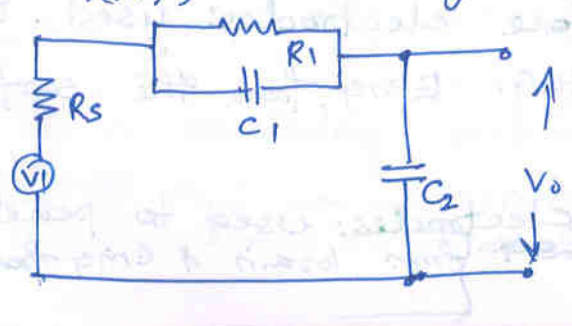

* Equivalant ckt for bio-potential with two electrodes. (Refer KTU Notes)
* Polarized and non polarized electrodes (freely e^- Ag - AgCl) — platinum
No charge passes across the electrode - electrolyte interface

* Micro electrodes: - To measure potential across the cell membrane

refer KTU Notes)

- electrodes with tips sufficiently small to penetrate single cell in order to obtain the reading from within the cell. It has very high impedance (M-2)
- Small surface area

- Two types
  * metal - Tip must be tungsten (OR) stainless steel
  ** micro pipette - it is glass micropipette with size of 1 micron, it is filled with electrolyte

Interface

Metal micro electrodes:

- are formed by electrolytically etching the tip of ~~the~~ a fine tungsten (or) stainless steel wire to the desired size.
- The wire is coated with an insulating material (almost till tip).

- metal - ion interface takes place where the metal tip contacts the electrolytes either inside (OR) outside the cell. (probe)

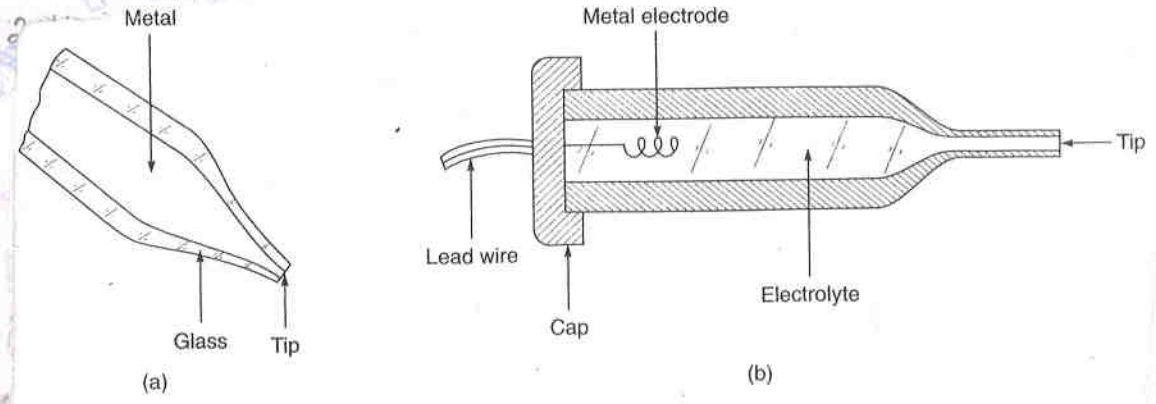

Fig. 2.25 (a) *Microelectrodes—metal microelectrodes*
(b) *Microelectrodes—micropipette or micro capillaries electrode*

(a) Metal Micro electrodes (b) micropipette OR capillary

** Micropipette

- is a type of microelectrode in a glass micro pipette with tip drawn out to the ~~desize~~ desired size.
- micro pipette is filled with an electrolyte compatible with the cellular fluids
- it has got dual interface.
- one interface consists of a metal wire - in contact with electrolyte solution inside the pipet.
- other is the interface x the electrolyte inside the pipet and the fluids inside (OR) outside cells.

Molarity M → is the concentration of solution expressed as the no. of moles of solute per liter of solution

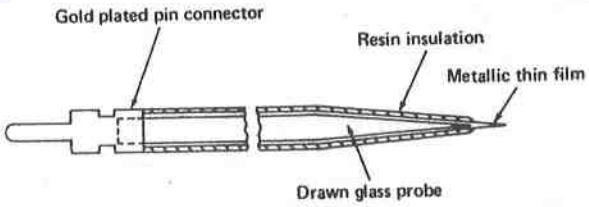

Figure 4.3. Commercial microelectrode with metal film on glass. (Courtesy of Transidyne General Corporation, Ann Arbor, MI.)

A commercial type of microelectrode is shown in Figure 4.3. In this electrode a thin film of precious metal is bonded to the outside of a drawn glass microelectrode. The manufacturer claims such advantages as lower impedance than the micropipet electrode, infinite shelf life, repeatable and reproducible performance, and easy cleaning and maintenance. The metal–electrolyte interface is between the metal film and the electrolyte of the cell.

Below Fig Shows

- Glass pipet is filled with a 3M solution of KCl & large end is capped with Ag - AgCl plug. The small end need not be capped.
- Reference electrode is filled with 3M KCl but is much larger than micro electrode. (compactible with cellular fluids)
- A platinum plug contains fluid on interface end, while Ag- AgCl plug caps at other end.

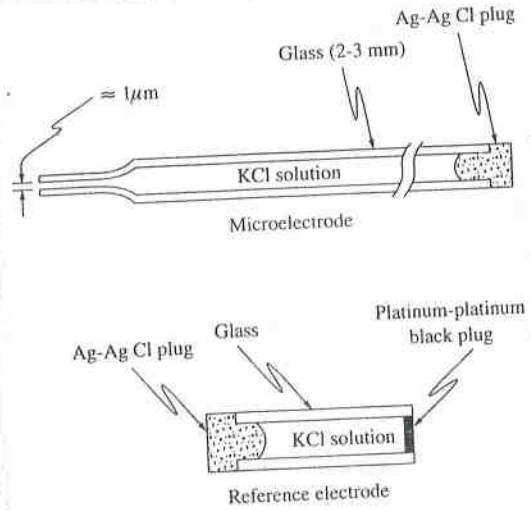

Figure 6-21
Fluid-filled microelectrode.

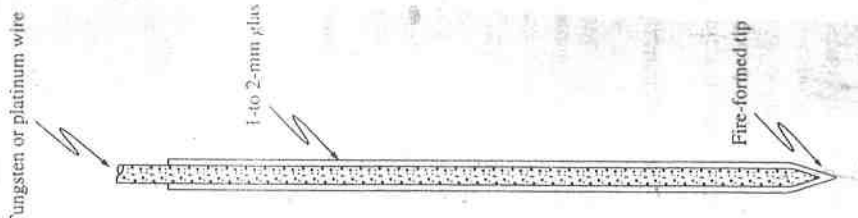

Figure 6-20
Glass-metal microelectrode.

glass-metal Micro electrode:

Fluid Filled Micro electrode:

** SKIN SURFACE ELECTRODES:

- are placed in contact with the skin of the subject
- surface electrodes diameter vary from 0.3 to 0.5cm (1cm range)
- Human skin impedance is higher than electrode impedance (0.5 kΩ to 20kΩ → ~~skinny~~ sweaty skin to dry skin)
- Surface electrode impedance are high impedance voltage source.

medical surface electrodes:

* Strap on variety :-
  - oldest form of ECG electrodes.
  - These are 1 – 2 square inches brass plates that are held in places by rubber straps.
  - A conductive gel (OR) paste is used to reduce the impedance x electrode & skin

** Suction cup electrode :-

Refer textbook

- A related form of ECG electrode is the suction cup electrode.

- This is used as a chest electrode in short-term ECG recording
- For long term recording (at ICU, coronary unit) we use paste on column electrodes.

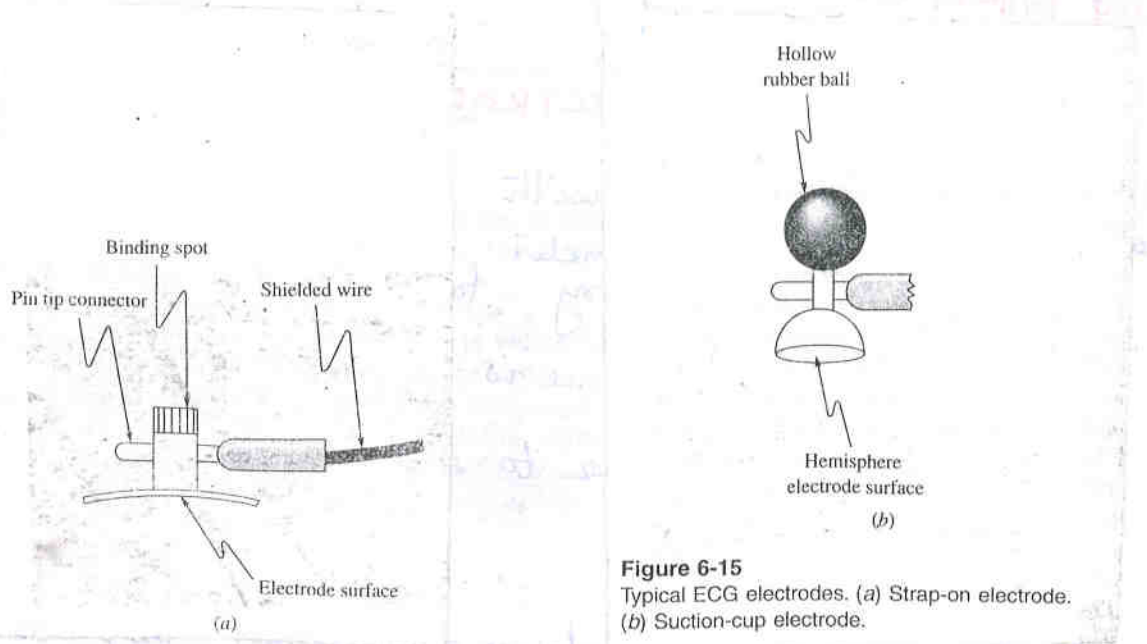

Figure 6-15
Typical ECG electrodes. (*a*) Strap-on electrode. (*b*) Suction-cup electrode.

strap-on electrode

suction cup electrode

*** Column electrode:

- It consist of a silver - silver chloride metal Condact button at the top of the hollow column
- it is filled with conductive gel (OR) paste
- This assembly is ~~placed~~ ~~on~~ held in place ~~by~~ by an adhesive - coated foam rubber stick.
- The use of gel filled column reduces movement artifact.
- its prefered for monitoring hospitalized patients.
- often used in monitoring situations is the 3 electrode pad
- ~~Sur~~ These pads have surface area of 20 - 30 sq: in & containing 3 ECG electrodes. in a simple packages.

[2 differential single pick up electrodes & reference electrodes]

- its a temporary disposable unit.

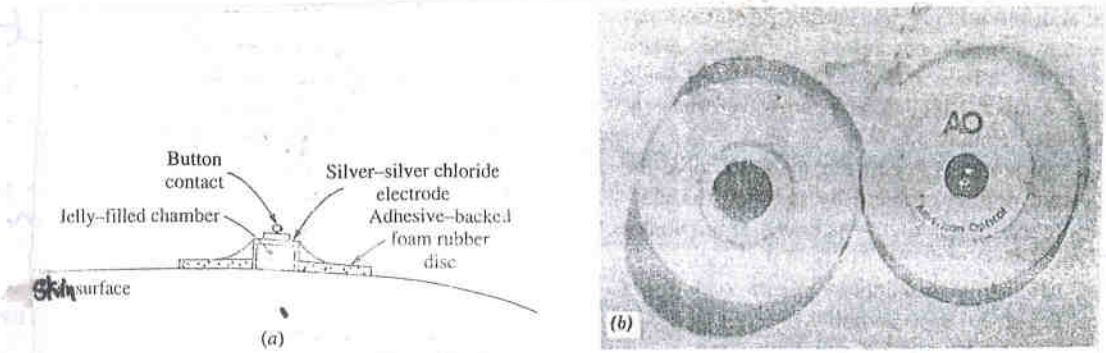

Figure 6-16
Column electrodes. (a) Cut-away side view. (b) A popular type of foam-backed column electrode.

Column Electrodes.

Problems with surface electrodes:

- problem with column electrodes is that the adhesive will not stick for long on sweaty (or) clammy skin surface.
- another problem is movement artifact which is generated by patient movements
- electrode ~~sp~~ slippage.-

  Results in ~~et~~ electrode impedance & offset voltage.
- This outward effect produces an artifact in recorded signal & this will intrepreted as a bio electric event in its own right
- This artifact problem can be over come by securing electrodes more lightly to the patients skin
- Another solution is use of rough surface electrode that dig in below the scaly outer layer of skin

*** Needle Electrodes:

- it is inserted into the ~~skin~~ { tissue } immediatly below the skin by purchering the skin at large oblique angle.
- used only for exceptionally poor skin, esply anesthetized patients and in ventilatary situation
- The problem with this electrode is infection.

- so it should be sterilized (or) disposable

** Indwelling electrodes:

- These electrodes are inserted into the body
- They are tiny exposed metalic contact at the end of a long insulated catheter
- Low ampl. high frequency features become visible only when this electrode is used
- Used to measure the intra cardiac ECG waveform
- ECG electrode:- may be a needle electrode.
- 1 cm diameter concave disc made either of gold (or) silver.
- disc is held in place by a thick paste that is highly conductive. (or) by a head band in certain monitoring appln.

Equivalent ckt of needle type EMG electrode pair

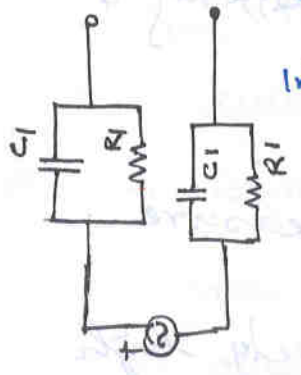

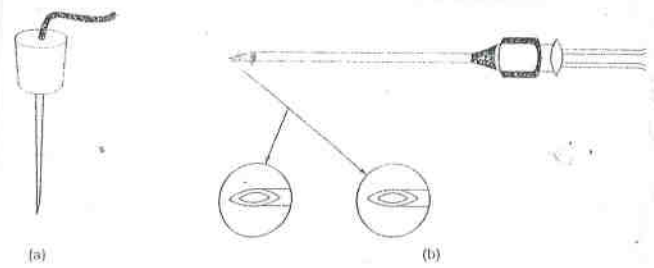

> Fig. 2.22 (a) *Needle type EMG electrode*
(b) *Hypodermic needle type EMG electrode*

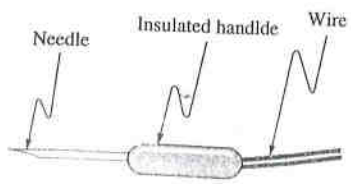

Figure 6-17

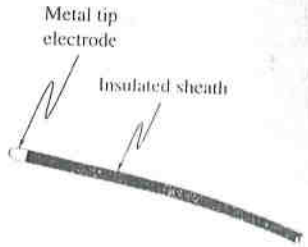

Figure 6-18

Needle electrode. Indwelling electrodes.

INSTRUMENTATION FOR CLINICAL LABORATORY:

BIOPOTENTIAL AMPLIFIERS:

- Amplifiers used to process biopotentials are called ~~biopotential amplr.~~ bio electric amplr.
- It is used to ↑se the power level & also to provide the isolation.
- Some are ac coupled and some are dc coupled
- ~~Dc~~ ~~Decoupled~~ are used where the i/p signals are clearly dc (OR) vary slowly.
- ac coupling amplr are used above 0.5 Hz.

→ Low gain amplr are those with gain factors between x1 & x10.

→ unity gain amplrs are used for buffering & isolation

→ Low gain amplrs are used to measure action potentials and other relatively high amplitude bio electric events

→ Medium gain amplr are those provide gain factors ≈ x10 & x1000

- and are used for recording of ECG waveforms and muscle potentials etc.

Essential features :- amplification, ↑se power levels, isolate the load from source.
- narrowed signal should not be distorted.
Basic requirements:- voltage amplr, high impedance, minimum loading effect, No electrical hazards.
- recording & display, high gain.

→ High gain amplrs have gain factors over x 1000 &
- are used for EEG measurents (sensitive measurements)

✓ Two important parameters in bioelectric amplrs (esply in high gain & medium gain) are

NOISE & DRIFT:

✓ DRIFT:- is the change in o/p signal caused by changes in operating temp/.

✓ NOISE:- Thermal noise generated in resistance & semiconductor devices.

* INSTRUMENTATION AMPLIFIER:-

Refer textbooks

- is a precission differential voltage gain device
- is having high gain & high i/p impedance
- It basically consist of three op-amps and 7 resistors.
- Basically connecting buffered amplr to a basic differential amplr makes an Instrumentation amplr.
- A1, A2, A3 are 3 op-amps. A1 & A2 are connected in non inverting follower configuration & A3 is connected in differential ampl: configuration.
- A3 with 4 resistor ⇒ differential amplr:
- gain of A3 is 1 (unity gain). $R_4 = R_5 = R_6 = R_7$.
- Rvar (R7) ⇒ varied to balance out any cm (common mode) voltage
- Rg1 (R1) ⇒ to set the gain using $V_0/V_1 - V_2 = 1 + \frac{2}{a}$
  $a = R_{g1}/R$

$-E_1$ is applied to non inverting terminal of A_1

E_2 " " " of A_2.

E_3 is the o/p of A_2.

E_4 is the o/p of A_1

$$E_3 = E_2\left(\frac{R_3}{R_1}+1\right) - E_1(R_3/R_1)$$

$$E_4 = E_1\left(\frac{R_2}{R_1}+1\right) - E_2(R_2/R_1)$$

if $R_2 = R_3$

$$E_3 - E_4 = E_2 - E_1\left(\frac{R_2}{R_1}+1\right) + E_2 - E_1\left(\frac{R_2}{R_1}\right)$$

$$E_3 - E_4 = E_2 - E_1\left(\frac{R_2}{R_1}+1+\frac{R_2}{R_1}\right)$$

$$E_3 - E_4 = E_2 - E_1\left(\frac{2R_2}{R_1}+1\right)$$

$$\therefore A_v = \frac{E_{out}}{E_{in}} = \left(\frac{2R_2}{R_1}+1\right)(R_5/R_4).$$

$$\boxed{A_v = \frac{2R_2}{R_1}+1}$$

* diff: amplr
* eliminates needs for i/p impedance matching
* used for measuring & testing equipments.

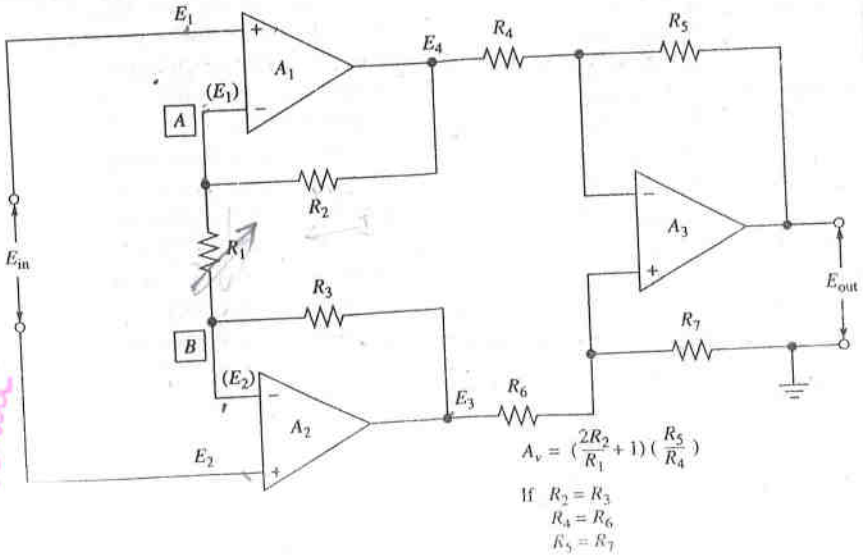

Instrumentation amplifier

— Advantages:

* extremely high i/p impedance.
* Low bias & offset current
* Very high CMRR
* High slew rate.
* Low power consumption.
* Ability to obtain high gain with low resistor value.

eg: of Instrumentation amplr: in IC form are ICL 7605, LH0036.

** Carrier amplifier:

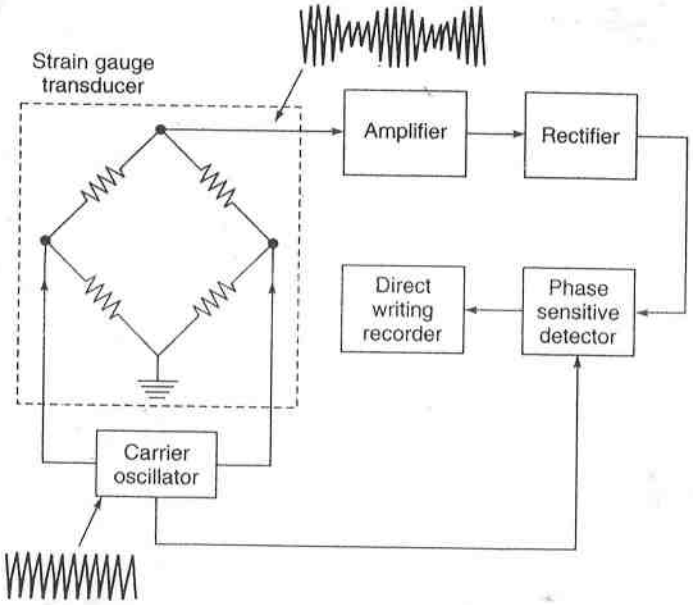

➤ **Fig. 4.6** *Block diagram of carrier amplifier*

Refer 10TU Notes

— Carrier type amplr is generally used to obtain zero frequency response of dc amplr. & stability of capacitance coupled amplr

- it consists of an oscillator & capacitance coupled amplr.

- oscl: is used to energize the transducer with an alternating carrier voltage

- (Transducer which required ac excitation ~~are~~ have impedance which is not purely resistive) The information signal from the body electrodes reaches the transducer, where it is amplimodulate with carrier signal from the carrier oscl

- Transducer shall change the amplitude of the carrier voltage in relation to the ~~pha~~ change in physiological variable being measured.

- o/p of the transducer would be an amplitude modulated signal (AM signal)

- modulated ~~AM~~ signal is fed to a xty stage capacitance coupled amplr

- The first stage produces amplification of AM signal.

- & 2nd stage ~~produces~~ ~~is~~ ~~so constructed~~ ~~that~~ ~~it~~ is responds ~~to~~ ~~carrier~~ ~~signal~~ ~~frequency~~ the signal frequency components of carrier signal only.

- further amplified in 3rd stage.

- (it can be amplified in following stages.)

→ converted to DC.

- After amplification, the signal is demodulated in phase sensitive demodulated ckt.

- This will help to extract amplified signal voltage after the ~~filter~~ Rectifier ckt.
- demodulator o/p (produces a voltage) is applied to the deiver stage of the writing system.
- carrier amplrs are used in resistance strain gauge transducer
- when used with pressure gauges, calibration controll is provided on the carrier amplr.
- used to measure blood pressure from ~~grap~~ calibrated graphic recorder

TYPE OF CARRIER AMPLY

* Lock in amplifier
  - is a useful varsion of the carrier amplr.
  - used for the measurement of low level signals burried in Noise.
  - it reduces wide band noise & increases SNR.
  - Carrier amplr: is a general purpose Instrument amplr & Lock in amplr to measure signals in a noisy back ground.
  - ~~it~~ Lock in amplr works ~~by~~ on referance frequency
  - Signal is modulated by the reference frequency in such a way that all desired data

a single frequency (ie referance frequency) where as noise ~~being broad banded~~ is at all frequencies

- This permits the signal to be recovered from its noisy background.

*** CHOPPER AMPLIFIER:

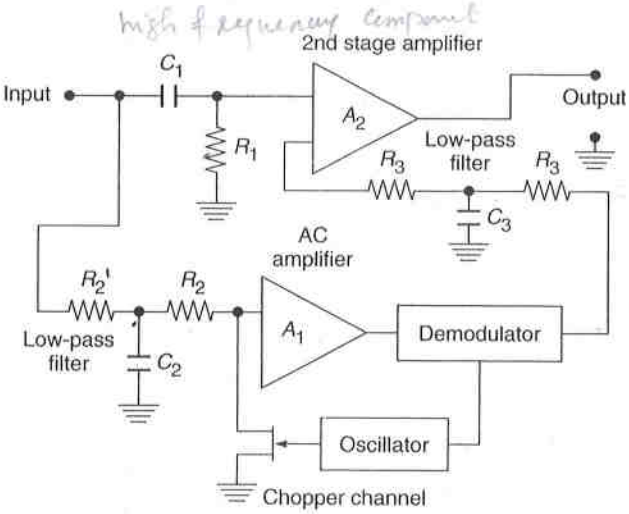

➤ **Fig. 4.7** *Simplified block diagram of a single ended chopper-stabilized* operational *amplifier*

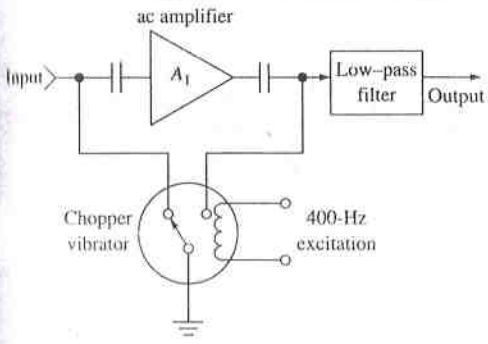

(a)

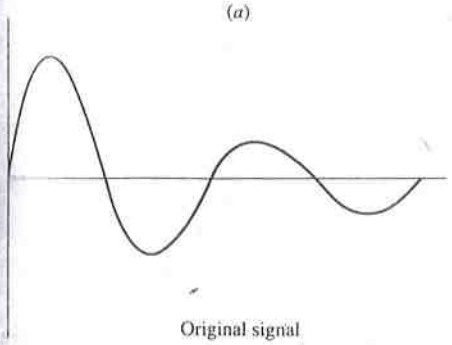

Original signal

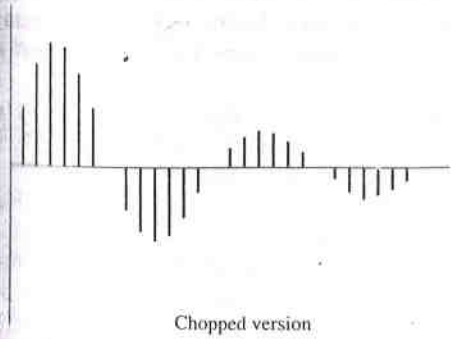

Chopped version

(b)

Figure 7-62 Chopper ampl

~~Chopper amplifier~~. (a) Simplified circuit. (b) Comparison of original and chopped waveforms.

1. Two problems arises when one tries to record low level biopotentials - Noise & drift.

2. These problems are made worst by high gain amplr.

3. This problem can be solved by converting dc → dc signal that will pass thr the amplr.

- chopper amplr: uses a chopping device which converts slowly varying dc ~~ct~~ to ac form with amplitude proportional to the i/p direct ct & with phase dependant on the polarity of the original signal.

- The alternating voltage is amplified by a conventional ac amplr whose o/p is rectified back to get an amplified direct current.

4. A chopper amplr is an excellent device for signals of narrow band width & reduces the drift problems.

5. Most of chopper amplr use 400Hz excitation signal

6. The chopper is a single pole double throw switch that grounds the amplr, i/p & o/p terminals on alternate swing of switch.

7. Figure 4.7 shows simplified block diagram of single-ended chopper stabilized amplr.
- Its available in single ended and differential i/p Confi/.
8. This amplifier acheives low offset voltage and bias current by chopping low frequency components of i/p signal.
~~and then demodulating the o/p of the ac amplr,~~
- and ~~then~~ amplifying chopped signal in an ac amplr (A_1)
- and then demodulating the o/p of the ac amplr.
9. The low frequency components in i/p signal are derived by passing it thr' a LPF.
R_2', C_2, & R_2 constitute this LPF
- chopping signal is generated by the oscillator.
- Filtered o/p is then amplified in the 2nd stage of the dc amplr (A_2).
- High frequency signals, are coupled directly to the 2nd stage ~~of~~ ~~the~~ amplr,.
- This will reduce the dc offset & drift of 2nd stage amplr.

- The ac amplr reduces the introduced no offset.
- The amplr modules contain the chopper ~~amplr~~ ckt, ~~sui~~ including switches & switch-driving oscl~~r~~ ~~unit~~ built on the module, only the dc power is supplied externally.
- Total ckt noise ~~should~~ can be reduced by designing the feed back n/w and external wiring.
- if total BW of the amplr is not required then feed back capacitor can be used to limit the over all band width.
- ~~seto~~ sheilding of feed back components is desirable in chopper amplrs
- Typical voltage drift is 0.1μ V/°c & ct drift is 0.5pA/°c.
- **Advantages** :- * insensitive to component change due to aging, temp change, power supply
  * provides gain stability. & * small off set voltage
  * Low noise operation.
  * gain is in the order of x 1000 & over.
- used with thermo coupler
- Used in medical feild in amplification of small dc signals of a few micro volts.
- Used in EEG amplr and universal bio electric amplr.
- ~~gain~~

*** ISOLATION AMPLIFIER: [iso-amp]

- It is used to ~~prefer~~ prevent accidental internal cardiac shock & also to prevent electrical shock hazards to patients.
- It provides $10^{12}\,\Omega$ of insulation ~~x~~ patient connectors and ac power mains line cord.
- Basic design is shown in figure. (7.41)

Any basis on selected {optical, magnetic, transformer, capacitive}

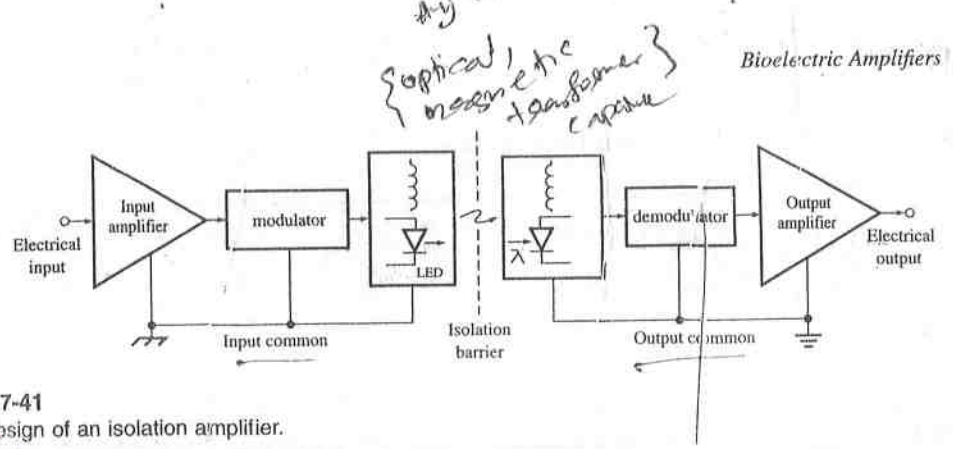

Figure 7-41
Basic design of an isolation amplifier.

3 types
* Transformer isolation
* optical "
* capacitive isolation

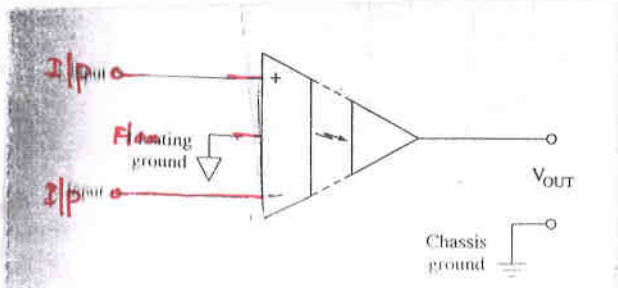

Figure 7.42 Symbol of iso-amplr

- usually composed of * an i/p amplr
  * some type of modulator
  * isolation barrier
  * a demodulator
  * and an o/p amplr.

- modulation schemes in-clude ampletude, flyback loading, voltage to frequency, duty cycle, pulse width, and others.

- Barriers can be optical, magnetic transformer capacitive (OR) even heat transfer

- Iso-amplr is really an energy converter. ie electrical energy on modulator side is converted to some non electrically conductive energy in the barrier and then converted back to electrical energy on demodulator side.

- it operates on the principle of attenuation

- high barrier impedance acts in series with the i/p & o/p.

- most of the noise is dropped across the barrier & very little add to the i/p.

- IMRR is isolation mode rejection ratio in V/V.

  $IMRR = \log^{-1}(IMR_{dB}/20)$.

  * it is the measure of how well the iso amp attenuates (OR) rejects the IMV (isolation mode voltage)

- Isolation amplr serves 3 purposes.
  * They amplify signal while passing ~~the~~ low leakage ct' to prevent shock
  * They with-stand high voltage to protect people, ckt & equipements
  * They break ground loops to permit incompactable ckts to the interfaced together.

- used in ~~ee~~ ECG recording

* OPTO ISOLATOR: (opto coupler)

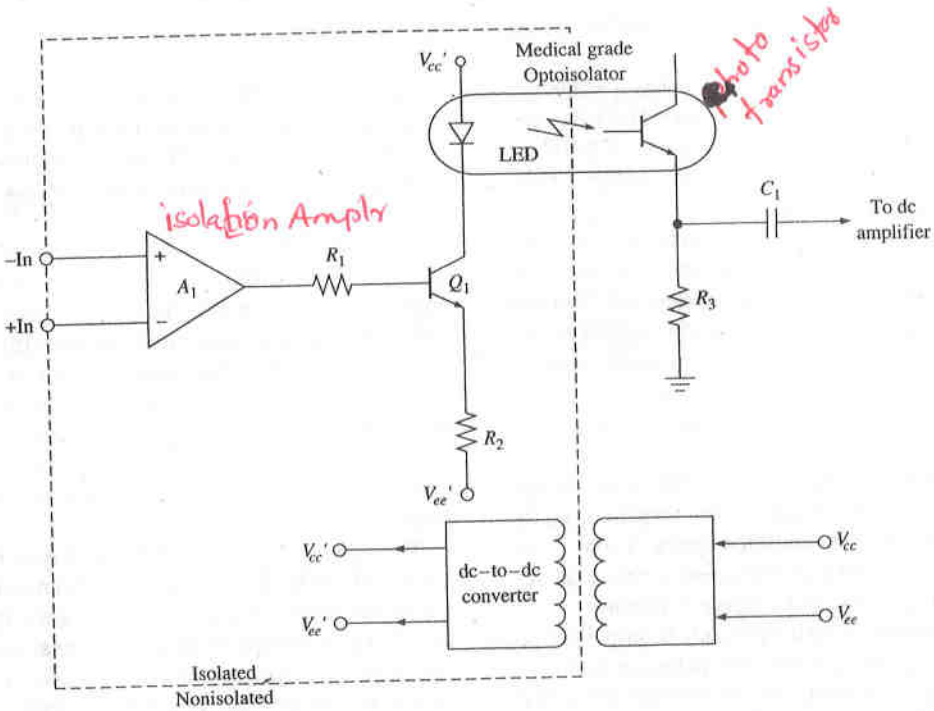

Figure 7-48
Optically coupled isolation amplifier.

- opto couplers are used to provide isolation
- It consist of an LED & a photo transistor sandwitched together

- LED in opto coupler is driven by the o/p of isolation amplr A_1
- The transistor Q_1 serves as a series switch to vary the light o/p of LED.
- which is proportional to analog signal from A_1
- Q_1 passes sufficient collector ct to bias LED.
- o/p of photo transistor is ac-coupled to the remaining amplrs on non isolated side of ct
- so that offset condition created by LED Bias is eliminated.

Possible questions:

1. What is the need of micro electrodes.
2. what are resting & action potential? Give their chara & how they are propagated.
3. Explain the functional organization of nervous system.
4. Draw ECG wave form with intervals & compl.
5. Explain human circulatory system.
6. How isolation amplr: are used in biomedical equipments?. give its types: Explain carrier amplr in detail
7. Explaine surface electrodes.
8. Explain chopper stabilized amplr. & Instrumentation amplr.
9. Explain ECG frequency band. ?
10. Biopotential electrodes ?
11. With a neat diagram explain cardio-vascular system
12. Explain EMG & ERG ?