# MODULE – I

## GENERAL PRINCIPLES OF MEASUREMENTS AND CLASSIFICATION OF METERS

1.1 Measurement standards – Errors - Types of Errors - Statistics of errors, Need for calibration.

1.2 Classification of instruments, secondary instruments – indicating, integrating and recording – operating forces

1.3 Essentials of indicating instruments – deflecting, damping, controlling torques.

1.4 Ammeters and voltmeters - moving coil, moving iron, constructional details and operation, principles shunts and multipliers – extension of range.

## MEASUREMENT

- An act or result of comparison between the quantity and a predefined standard.
- Process by which one can convert physical parameters to meaningful numbers.
- Property of a system or object under consideration is compared to an accepted standard unit.
- Basic requirements:
  - Standard used for comparison must be accurately defined and should be commonly accepted.
  - The apparatus used and method adopted must be provable

## MEASURING INSTRUMENTS

- "The device used for comparing the unknown quantity with the unit of measurement or standard quantity is called a Measuring Instrument."

OR

- "An instrument may be defined as a device or system which is designed to maintain functional relationship between prescribed properties of physical variables & must include ways and means of communication to a human observer."

## METHODS OF MEASUREMENTS

- **Direct methods**

- unknown quantity is directly compared against a standard.
- The result is expressed as a numerical number and a unit.
- Eg: Length, mass and time.
- On account of human factors, it is not possible to make very accurate measurements.
- Direct methods are not always possible, feasible and practicable.
- less sensitive.
- Hence direct methods are not preferred and rarely used.

- **Indirect methods**

- In engineering applications, measurement systems are used which require need of indirect methods.
- Mechanical , electrical and electronic instruments.

- **Mechanical instruments**
  - reliable for static and stable conditions.
  - E.g.: pressure gauge
  - Disadvantages
    - unable to respond rapidly to dynamic and transient conditions as moving parts are rigid, heavy and bulky with large mass creating inertia problems.
    - noise pollution
- **Electrical instruments**
  - indicating the output of detectors are more rapid than mechanical methods.
  - Uses mechanical parts such as pointers, springs etc. causing some inertia and hence have limited time response.
  - E.g.: voltmeter , ammeter , wattmeter
- **Electronic instruments**
  - Uses electronic components and electronic principles.
  - Only movement is due to electrons with small inertia resulting in extremely small response time of the order of micro or nanoseconds.
  - Very fast response
  - high degree of reliability
  - Low weight
  - Compact
  - Low power consumption
  - Even very weak signals can be detected by using pre-amplifiers and amplifiers. Hence higher sensitivity.
  - Ability to obtain indication from remote location helping in monitoring inaccessible or dangerous locations.
  - Can be used to measure non electrical quantity which is converted to electrical quantity using transducers
  - E.g.: digital voltmeter, CRO

## ELEMENTS OF A GENERALIZED MEASUREMENT SYSTEM

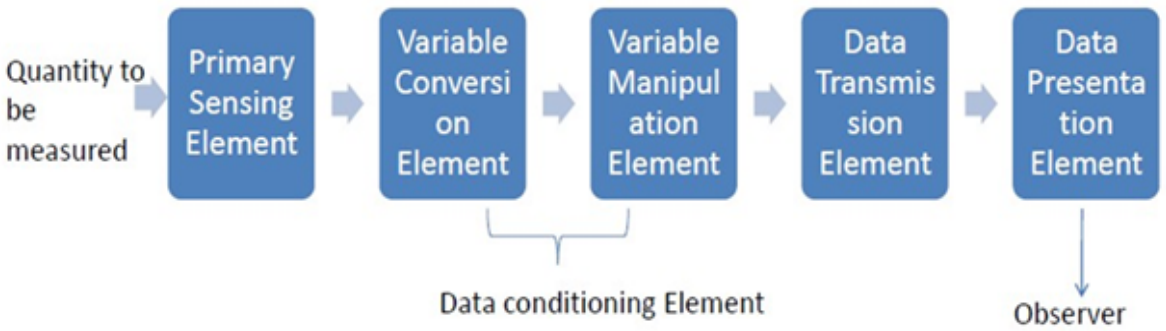

- It consist of a transducing element which converts the quantity to be measured to an analogous form.
- The analogous signal is then processed by some intermediate means
- Then fed to the end devices which presents the result of measurement for the purpose of display or control.

## CLASSIFICATION OF STANDARDS OF MEASUREMENT

A standard is a physical representation of a unit of measurement.

1. International standards
2. Primary standards
3. Secondary standards
4. Working standards

## INTERNATIONAL STANDARDS

- Defined on the basis of international agreement.
- Represents the units of measurements which are closest to the possible accuracy attainable with present day technological and scientific methods.
- Checked and evaluated regularly against absolute measurements in terms of fundamental units.
- These standards are maintained at the International Bureau of Weights and Measures at Severes, near Paris and are not available to the ordinary user of measuring instruments for the purposes of calibration or comparison.
- For example, the fundamental unit of mass in the metric system (SI) is the kilogramme, defined as the mass of the cubic decimetre of water at its temperature of maximum density of 4°c.
- This unit of mass is represented by a material standard : the mass of the International Prototype kilogramme consisting of platinum iridium hollow cylinder.
- This unit is preserved at the International Bureau of Weights and Measures at Severes, near Paris and is the material representation of the kilogramme.

## EXAMPLES FOR INTERNATIONAL STANDARDS

- **ISO** - International Organization for Standardization
- **IEEE** – Institute of Electrical and Electronics Engineers
- **IATA** – International Air Transport Association
- **IEC** – International Electrotechnical Commission
  - India— **BIS** — Bureau of Indian Standards

## PRIMARY STANDARDS

- They are absolute standards of such high accuracy that they can be use as the ultimate reference standards.
- These standards are maintained by national standards laboratories in different parts of the world.
- Their main function is the verifications and calibration of secondary standards.
- They are few in number.

- These standards must have:
  - Highest possible accuracy
  - Highest stability – their values should vary as small as possible over long periods of time even if there are environmental and other changes.

## SECONDARY STANDARDS

- These are basic reference standards used in industrial measurement laboratories.
- The responsibility of maintenance and calibration of these standards lies with the particular industry involved.
- These standards are checked locally against reference standards available in the area.
- These are sent periodically to the national standards laboratories for calibration and comparison against primary standards
- These are sent back to industry by national laboratories with a certification as regards their measured values in terms of primary standards.

## WORKING STANDARDS

- Major tools of measurement laboratory.
- These are used to check and calibrate general laboratory instruments for their accuracy and performance.
- Accuracy of one order lower than secondary standards.
- Used by the workers and technicians who actually carried out the measurement.

## ERRORS IN MEASUREMENT

No measurement can be made with perfect accuracy.

Basic three types of errors are:

1. Gross Errors
2. Systematic Errors
3. Random Errors

## GROSS ERRORS

- Gross errors mainly covers human mistakes in reading instruments and recording and calculating measurement results.
- Example: Due to oversight, one may read the temperature as $31.5^0$c while the actual reading may be $21.5^0$c.
- Mathematical analysis is impossible.
- They can be avoided by adopting two means:
  1. Great care should be taken in reading and recording the data.
  2. Two, three or even more readings should be taken for the quantity under measurement.

## SYSTEMATIC ERRORS

Systematic errors are classified into three categories:

1. Instrumental Errors
2. Environmental Errors
3. Observational Errors

## INSTRUMENTAL ERRORS

These errors arise due to three main reasons:

i. Due to inherent shortcomings in the instrument
ii. Due to misuse of the instruments
iii. Due to loading effects of instruments

1. Due to inherent shortcomings in the instrument

- Inherent in instruments due to their mechanical structure.
- may be due to construction, calibration or operation
- error may cause instrument to read too low or too high.

Example:- If the spring of a permanent magnet instrument has become weak then instrument will always read high.

Errors may be caused because of friction, hysteresis, or even gear backlash.

This error can be eliminated or reduced to a great extent by using following methods:

i) Procedure of measurement must be carefully planned. Substitution methods or calibration against standards may be used
ii) Correction factors should be applied after determining instrumental errors.
iii) Instrument may be recalibrated carefully.

2. Due to misuse of the instruments

Good instrument used in an unintelligent way may give erroneous results and even permanent damage to the instruments.

- may be failure to adjust the zero of instruments.
- Poor initial adjustments
- using leads of too high a resistance.
- Overloading and overheating.

3. Due to loading effects of instruments

- *"the incapability of the system to faithfully measure, record or control the input signal (measurand) in undistorted form is called the loading effect"*
- One of the most common errors committed by beginners is improper use of an instrument for measurement work.

Eg: Well calibrated voltmeter connected across high resistance may give misleading voltage, while same voltmeter connected across low resistance may give dependable reading due to loading effect of voltmeter on the circuit altering actual circuit conditions by the measurement process.

## ENVIRONMENTAL ERRORS

- Errors due to conditions external to measuring device including conditions in area surrounding the instrument.
- These may be effects of temperature, pressure, humidity, dust, vibrations, external magnetic or electrostatic fields etc.
- Corrective measures employed to eliminate or reduce these undesirable effects are:
  - (i) Arrangements should be made to keep the conditions as nearly as constant.

    Eg: Equipment in temperature controlled enclosure for keeping temperature constant.
  - (ii) Using equipment which is immune to these effects

    Eg: Variations in resistance with temperature can be minimized by using resistance materials which have a very low resistance temperature coefficient.
  - (iii) Employing techniques which eliminate the effects of these disturbances.

    Eg: Effect of humidity, dust etc. can be eliminated by hermetically sealing the equipment.
  - (iv) Magnetic and electrostatic shield should be provided for instrument susceptible to electric and magnetic field.
  - (v) Applying computed corrections

## OBSERVATIONAL ERRORS

There are many sources of observational errors:

- When the pointer lies above the surface of scale, PARALLAX error may occur if the line of vision of observer is not exactly above the pointer. This error can be minimized by using highly accurate meters with mirrored scales. This error can be eliminated by having pointer and scale in the same plane.
- No two persons observe same situation in exactly same way where small details are concerned.
- Modern instruments have digital display of output which completely eliminates these errors.

## RANDOM (RESIDUAL) ERRORS

- Even after systematic errors are taken care of, some errors remains.
- The quantity being measured is affected by many happenings throughout the universe.
- We are aware of and account for some of the factors influencing the measurement, but about the rest we are unaware.
- The happenings or disturbances about which we are unaware are lumped together and called Random or Residual.
- Hence the errors caused by these happenings are called Random or Residual errors.

## STATIC ERROR

- It is defined as the difference between the measured value and true value of the quantity.
- It involves the comparison of an unknown quantity with an accepted standard quantity.
- Absolute static error : $\delta A = A_m - A_t = \epsilon_0$
- Static correction: $\delta C = A_t - A_m = -\delta A$
- Relative static error, $\epsilon_r$ = Absolute static error/ true value = $\delta A/A_t = \epsilon_0/A_t$
  - $A_t$ -true value of quantity
  - $A_m$- measured value of quantity.

## TRUE VALUE

- It is not possible to determine true value by experimental means.
- True value is defined as the average of an infinite number of measured values when the average deviation due to various contributing factors tends to zero.
- In practice, true value refers to a value obtained if quantity under consideration were measured by an Examplar method.

1. A meter reads 127.50v and the true value of voltage is 127.43v. Determine static error and static correction.

   Static error : $\delta A = A_m - A_t = 127.50 - 127.43 = +0.07V$

   Static correction: $\delta C = A_t - A_m = -\delta A = -0.07V$

2. A thermometer reads $95.45^0$c and static correction given is $-0.08^0$c. Determine the true value.

   $A_t = A_m + \delta C = 95.45 - 0.08 = 95.37^0c$

3. A voltage has a true value of 1.50V. An analog instrument with a scale range of 0-2.50V shows a voltage of 1.46V . What are the values of absolute error and correction. Express the error as a fraction of true value and full scale deflection.

   Absolute error : $\delta A = A_m - A_t = 1.46 - 1.50 = -0.04V$

   Static correction: $\delta C = -\delta A = +0.04V$

   Relative error: $\epsilon_r = \delta A/A_t = -0.04*100 / 1.50 = -2.67\%$

   Relative error expressed as a percentage of full scale deflection = -0.04*100/2.50 = -1.60%

4. A voltmeter having a sensitivity of 1000 Ω/V reads 100 V on its 150 V scale when connected across an unknown resistor in series with a milli-ammeter.

   When the milli-ammeter reads 5 mA, calculate:

   i)apparent resistance of unknown resistor,

   ii)actual resistance of unknown resistor, and

   iii)error due to loading effect of voltmeter.

**Solution :** Total circuit resistance

$$R_T = \frac{E_T}{I_T} = \frac{100}{5 \times 10^{-3}} = 20 \times 10^3\ \Omega = 20\ k\Omega.$$

Neglecting the resistance of milli-ammeter, the value of unknown resistor is :

$$R_x = 20\ k\Omega.$$

(*b*) Resistance of voltmeter $R_v = 1000 \times 150 = 150 \times 10^3\ \Omega = 150\ k\Omega.$

As the voltmeter is in parallel with the unknown resistance, we have :

$$R_T = \frac{R_x R_V}{R_V + R_x} \qquad \therefore R_T(R_V + R_x) = R_x R_V \qquad \therefore R_T R_V = R_x(R_V - R_T)$$

or unknown resistance $R_x = \dfrac{R_T R_V}{R_V - R_T} = \dfrac{20 \times 150}{150 - 20} = 23{\cdot}077\ k\Omega.$

(*c*) Percentage error $= \dfrac{\text{erroneous quantity} - \text{true quantity}}{\text{true quantity}} \times 100$

$$= \frac{20 - 23{\cdot}077}{23{\cdot}077} \times 100 = -13{\cdot}33\%$$

What happens when milli-ammeter reads 800mA and the voltmeter reads 40V on its 150V scale?

**Solution :** (*a*) $R_T = \dfrac{E_T}{I_T} = \dfrac{40}{800 \times 10^{-3}} = 50\ \Omega.$

(*b*) $R_V = 1000 \times 150\ \Omega = 150\ k\Omega.$

$\therefore$ $R_x = \dfrac{R_T R_V}{R_V - R_T} = \dfrac{50 \times 150 \times 10^3}{150 \times 10^3 - 50} = 50{\cdot}017\ \Omega.$

(*c*) Percentage error $= \dfrac{50{\cdot}0 - 50{\cdot}017}{50{\cdot}017} \times 100 = -0{\cdot}034\%.$

## CALIBRATION

- During calibration an instrument is checked against a known standard to find errors and accuracy.
- Calibration involves a comparison of particular instrument with either primary or secondary standard with a higher accuracy than instruments to be calibrated or an instrument of known accuracy.
- All working instruments must be calibrated against some reference instruments having higher accuracy.
- These reference instruments in turn must be calibrated against instrument of higher accuracy or primary standard or other standards of known accuracy.

- It is essential that any measurement made must ultimately be traceable to the relevant primary standards.
- Accuracy of the standard should be ten times the accuracy of the measuring device being tested. Accuracy ratio of 3:1 is acceptable by most standard organizations.
- Calibration of measuring instruments has two objectives:
  1. It checks the accuracy of instrument and determines traceability of the measurement. In practice, calibration also includes repair of device if it is out of calibration.
  2. A report is provided by the calibration expert, which shows the error in measurements with the measuring device before and after the calibration.

Why calibration is important?

- The accuracy of all measuring devices degrade over time. This is typically caused by normal wear and tear.
- Changes in accuracy can also be caused by electric or mechanical shock or a hazardous manufacturing environment (e.g., oils, metal chips etc.).
- Depending on the type of the instrument and the environment in which it is being used, it may degrade very quickly or over a long period of time.
- Calibration improves the accuracy of the measuring device.
- Accurate measuring devices improve product quality.

When should you calibrate your measuring device?

- According to recommendation of the manufacturer.
- After any mechanical or electrical shock.
- Periodically (annually, quarterly, monthly)
- Hidden costs and risks associated with the un-calibrated measuring device could be much higher than the cost of calibration.
- Therefore, it is recommended that the measuring instruments are calibrated regularly by a reputable company to ensure that errors associated with the measurements are in the acceptable range.

## SIGNIFICANCE OF STANDARDS

- Measurement Standard: A material measure, measuring instrument, reference material or measuring system intended to define, realize, conserve or reproduce a unit or one or more values of a quantity to serve as a reference.
- Measurement Traceability: The property of the result of a measurement or the value of a standard whereby it can be related to stated references, usually national or international standards, through an unbroken chain of comparisons, all having stated uncertainties.

## CLASSIFICATION OF INSTRUMENTS

1. Active and passive instruments
2. Absolute and secondary instruments
3. Null and deflection type instruments
4. Monitoring and control instruments
5. Analog and digital instruments
6. Mechanical, electrical and electronic instruments
7. Manual and automatic instruments
8. Self operated and power operated instruments
9. Self contained and remote indicating instruments
10. Direct measuring and comparison instruments
11. Indicating, recording and integrating instruments

## ACTIVE AND PASSIVE INSTRUMENTS

| | Passive instruments | | Active instruments |
|---|---|---|---|
| 1. | The output is produced entirely by the quantity being measured. | 1. | The quantity to be measured activates some external power input source, which inturn produces the output. |
| 2. | Additional energy input source not required. | 2. | Additional external energy input source is required. |
| 3. | The resolution is less. | 3. | The resolution is high. |
| 4. | The resolution can not be easily adjusted. | 4. | The resolution can be adjusted by adjusting the magnitude of the external energy input. |
| 5. | Simple to design. | 5. | Complicated to design. |
| 6 | Cheaper hence economical. | 6. | Due to complex design and higher number of elements, it is costlier. |

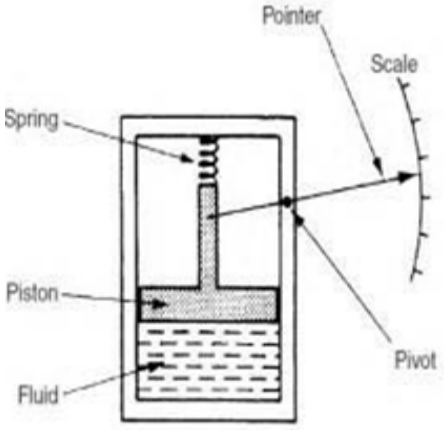


Passive instrument
E.g.: pressure gauge

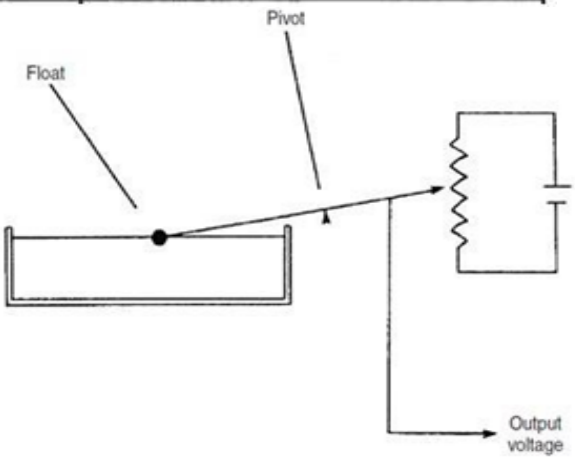


Active instrument
E.g.: liquid level indicator

## ABSOLUTE AND SECONDARY INSTRUMENTS

**Absolute instruments**:- quantity under measurement gives magnitude in terms of physical constants of the instruments and its deflection. eg: tangent galvanometer.

**Secondary instruments:**- quantity being measured can only be measured by observing the output indicated by the instrument. - These instruments are calibrated by comparison with an absolute instrument or another secondary instrument which has already been calibrated against an absolute instrument.

- Since measurement using absolute instruments are time consuming, secondary instruments are commonly used.

eg: voltmeter, glass thermometer, pressure gauge.

## NULL AND DEFLECTION TYPE INSTRUMENTS

**Deflection type** - measured quantity produce some physical effect which deflects or produces a mechanical displacement.

- opposing effect is built in instrument which tries to oppose the mechanical displacement
- Balance is achieved when opposing effect equals to cause producing mechanical displacement.
- The value of measured quantity can then be inferred from deflection at the point of balance.

Deflecting torque, $T_d = GI$

Controlling torque, $T_c = K\theta$

Under balancing $T_d = T_c$

$I = K\theta/G$

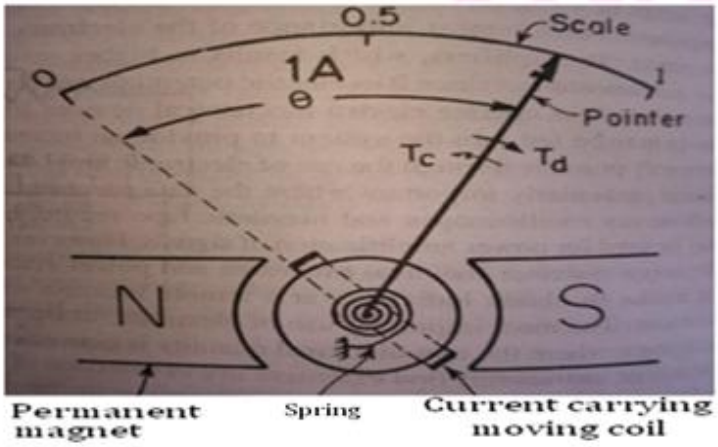


Permanent magnet moving coil ammeter

**Null type**- Zero or null indication leads to determination of magnitude.

- it tries to maintain the deflection at zero by application of effect opposing that generated by measured quantity.
- it requires (1) effect produced by measured quantity (2) opposing effect (3) detector
- more accurate than deflection type
- highly sensitive than deflection type
- Deflection type are more suitable for dynamic conditions, while null type the response is slow

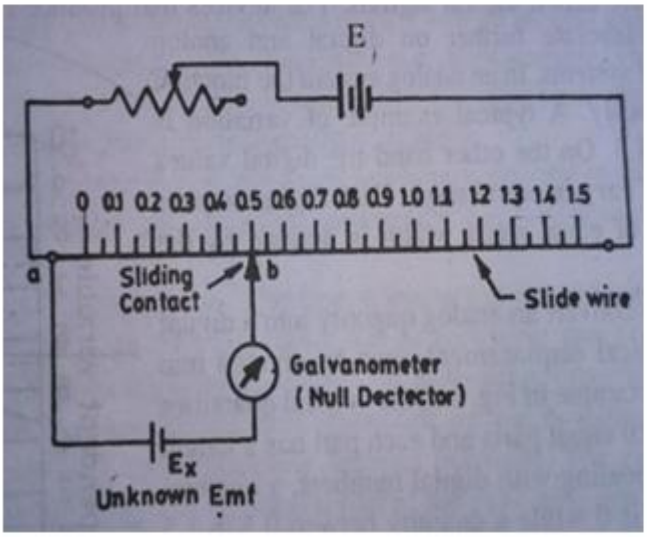


DC potentiometer with current galvanometer

## MONITORING AND CONTROL INSTRUMENTS

Monitoring instruments : Used for monitoring function

- Indicates value or condition only
- Audio / visual indications
- Includes all null type instruments and most passive transducers
- E.g.: voltmeter, ammeter etc

Control instruments : used to automatically control the systems

- Feedback path
- E.g.: Refrigeration system with thermostatic control

## ANALOG AND DIGITAL INSTRUMENTS

- Analog device is one which output or display signal that vary in a continuous fashion and take on an infinite number of values in any given range.
- Eg: Ammeter and Voltmeter
- Digital device produce signal that vary in discrete step and take up only finite different values in a given range.

## MANUAL AND AUTOMATIC INSTRUMENTS

- In case of manual instruments services of an operator are required.
- In automatic instrument, an operator is not required.

## SELF OPERATED AND POWER OPERATED INSTRUMENTS

- Self operated instrument does not require any outside power for its operation; output energy is supplied wholly or almost wholly by input signal.
- Eg: mercury-in-glass thermometer
- Power operated instrument require some auxiliary source of power for its operation. In such cases, input signal supplies only an insignificant portion of output power.

## SELF CONTAINED AND REMOTE INDICATING INSTRUMENTS

- A self contained instrument has all its different elements in one physical assembly.

- In remote indicating instrument, the primary sensing element may be located at an adequate long distance from the secondary indicating element.

## DIRECT MEASURING AND COMPARISON INSTRUMENTS

- **Direct measuring instrument**- convert energy of measurand directly into energy that deflects the moving element of the instrument and the value of unknown quantity is measured or displayed or recorded directly.
  - Widely used since simple and inexpensive.
  - Measures in shortest possible time
  - Eg: ammeter, voltmeter
- **Comparison instruments** - measures the unknown quantity by comparison with a standard bridge
  - Higher accuracy
  - Eg: dc and ac bridges

## INDICATING, RECORDING AND INTEGRATING INSTRUMENTS

- Indicating Instruments: It indicate the magnitude of an electrical quantity at the time when it is being measured. The indications are given by a pointer moving over a graduated dial.
- Recording Instruments: The instruments which keep a continuous written record of the variations of the magnitude of an electrical quantity to be observed over a defined period of time.
- Integrating Instruments: They measure the total amount of either quantity of electricity or electrical energy supplied over a period of time. Eg: energymeters

## FUNCTIONS OF INSTRUMENTS

- Indicating
- Recording
- Controlling
  - Here the observation is used by the instrument/ system to control the original measured quantity
  - E.g. home AC system

## PRINCIPLES OF OPERATION

The effects utilized by instruments for their operation are:

i) Magnetic effect
ii) Electrostatic effect
iii) Heating effect
iv) Electromagnetic effect
v) Hall effect

## MAGNETIC EFFECT

- Current carrying conductor with magnetic field in anticlockwise direction is placed in a uniform magnetic field resulting in distortion of magnetic field causing a force F to act from left to right.
- Reversal of direction of current causes F to act from right to left.

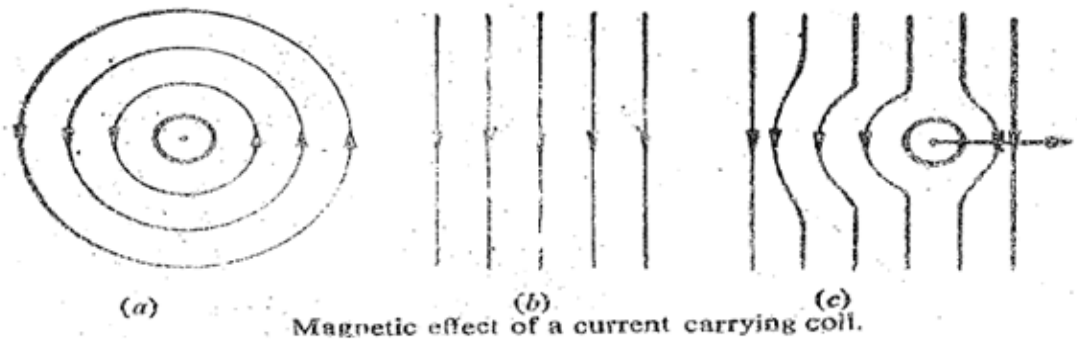

Magnetic effect of a current carrying coil.

## FORCE OF ATTRACTION OR REPULSION

- If conductor is formed into a coil, magnetic field produced by each turn adds up and coil behave as imaginary magnet.
- When a piece of soft iron is brought near coil, it is attracted by the coil.

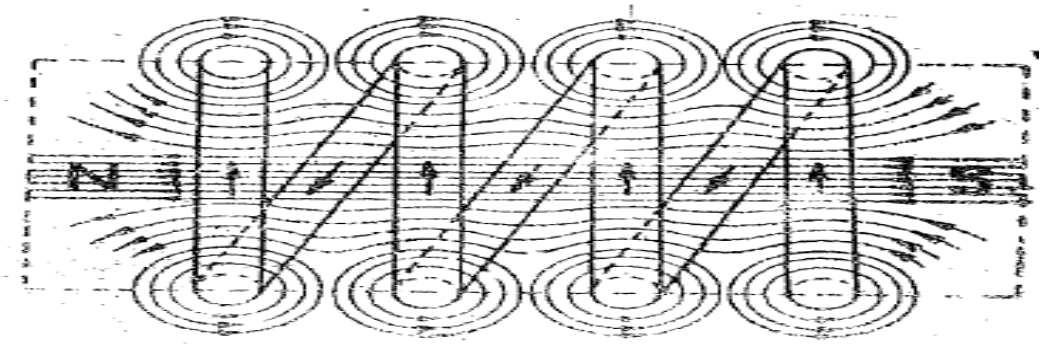

Magnetic field produced by current carrying coils.

- If we pivot soft iron on a spindle between two bearings and a coil is mounted near it, iron piece will swing into the coil.
- This effect is utilized in attraction type of moving iron instruments.
- If two pieces of soft iron are placed near the coil, two will be similarly magnetized and there will be force of repulsion.
- This effect is utilized in repulsion type moving iron instruments.

## FORCE BETWEEN A CURRENT CARRYING COIL AND A PERMANENT MAGNET

- If a permanent magnet is brought near a current carrying coil, there will be either a force of attraction or repulsion.
- If coil is mounted on a spindle between bearings, there will be movement of coil.
- This effect is utilized in permanent magnet moving coil instruments.

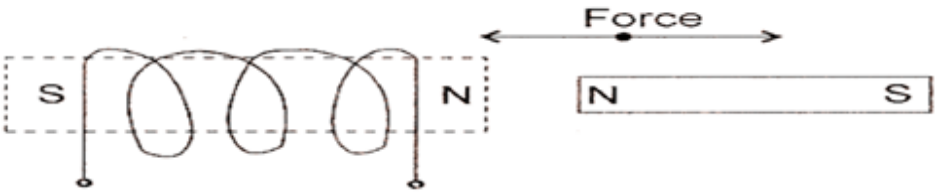

## FORCE BETWEEN TWO CURRENT CARRYING COILS

- For the shown directions of currents, the two coils produce unlike poles near each other and there is force of attraction.
- If one coil is movable and other is fixed , there is motion of movable coil.
- This effect is utilized in Dynamometer type of instruments.

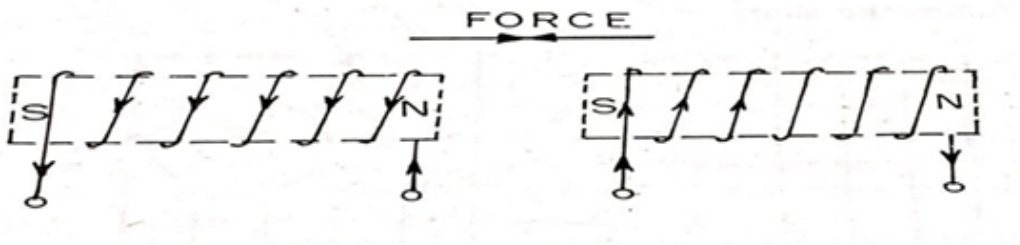


## ELECTROSTATIC EFFECT

- When two plates are charged,force is exerted between them, which is used to move one of the plates.
- Instruments working on this principle are called electrostatic instruments.
- They are usually voltmeters.

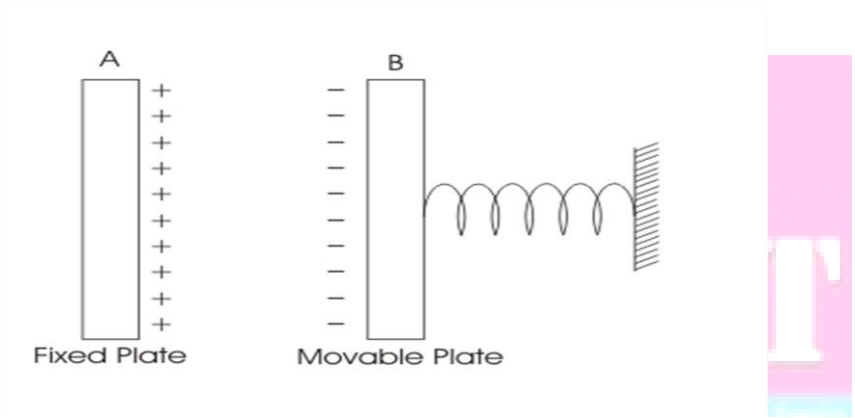


## THERMAL EFFECT

- Current to be measured is passed through a small element which heats it.
- Temperature rise is converted to an EMF by a thermocouple attached to the element.
- Thermocouple consists of lengths of two dissimilar electric conductors joined at ends to form a closed loop.
- If junctions of two dissimilar metals are kept at different temperatures, a current flows through the closed loop.
- This current can be measured.

## INDUCTION EFFECT

- When a non-magnetic conducting pivoted disc or drum is placed in a magnetic field produced by a system of electromagnets excited by alternating currents, an emf is induced in disc or drum.
- If a closed path is provided, the emf forces a current to flow in the disc or drum
- The force produced by the interaction of induced currents and alternating magnetic fields makes the disc move.
- The induction effect is utilized in AC energy meters.

## HALL EFFECT

- If a strip of conducting material carries current in the presence of transverse magnetic filed, an EMF is produced between two edges of conductor.
- Magnitude of voltage depends upon current, flux density and a property of conductor called Hall effect coefficient.
- Eg: Poynting Vector Wattmeter used for measuring power loss density at surface of a magnetic material.

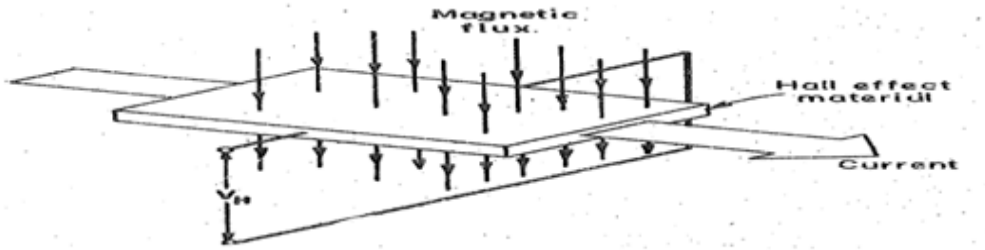


## EFFECTS USED IN INSTRUMENTS FOR THEIR OPERATION

| *Effect* | *Instruments* |
|---|---|
| Magnetic effect | Ammeters, voltmeters, wattmetes, integrating meters. |
| Heating effect | Ammeters and voltmeters, wattmeters. |
| Electrostatic effect | Voltmeters. |
| Induction effect | A.C. ammeters, voltmeters, wattmeters, energy meters. |
| Hall effect | Flux meters, ammeters and Poynting vector wattmeter. |

## OPERATING FORCES

Three types of forces are needed for the satisfactory operation of any indicating instrument. These are:

1. Deflecting force
   - Required to move the pointer from its zero position
   - Deflecting system of an instrument converts the electric current or potential into mechanical force called deflecting force
   - It is produced by utilising the various effects.
2. Controlling force
   - Required in order that current produces deflection of pointer proportional to its magnitude.
   - Usually provided by springs.
   - Functions of controlling system are:
     - To produce force equal and opposite to deflecting force at final steady position of pointer in order to make deflection definite for a particular magnitude of current.
     - To bring the moving system back to zero when force causing the instrument moving system to deflect is removed.

3. Damping force

- Deflecting and controlling forces are produced by systems which have inertia and the moving system cannot immediately settle at its final position but overshoots or swings ahead of it.
- Necessary so that moving system comes to equilibrium position rapidly and smoothly without any oscillations.

## Damping Torque

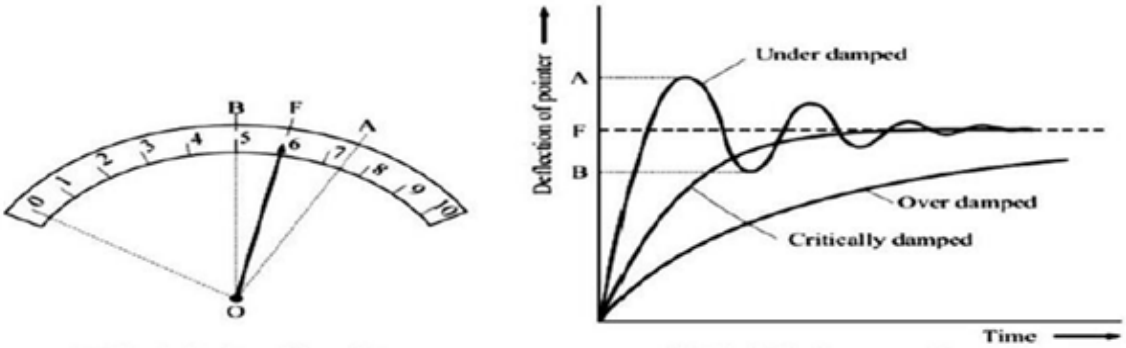


(a) The deflection of the pointer on the scale.

(b) The deflection versus time curves.

- **Under damped condition:**

  The response is oscillatory
- **Over damped condition:**

  The response is sluggish and it rises very slowly from its zero position to final position.
- **Critically damped or dead beat condition:**

  When the response settles quickly without any oscillation, the system is said to be critically damped.

## ESSENTIALS OF INDICATING INSTRUMENTS

- Deflecting or Operating torque
- Controlling or Restoring torque
- Damping torque

## CONTROL SYSTEMS

Two types of control systems which are used:

- Gravity control
- Spring control

## GRAVITY CONTROL

- A small weight is placed on an arm attached to the moving system. The position of this weight is adjustable. This weight produces a controlling torque due to gravity. This weight is called the control weight.
- Another adjustable weight attached to the moving system for zero adjustment and balancing purpose is called Balancing weight.

- When system deflects through an angle θ, the component of weight trying to restore pointer back to zero position is Wsinθ.
- So controlling torque, Tc = Wsinθ* l =Wlsinθ =Kg.sinθ

  Kg=W×l=constant

  W = weight, l =length, θ= deflection of pointer
- Hence controlling torque is proportional to sine of angle of deflection.
- It can be varied by adjusting position of control weight.
- Deflecting torque, Td = $K_d$I ; I=current, $K_d$ = constant
- At equillibrium,Td =Tc ; $K_d$I =Kg.sinθ ; I α sinθ

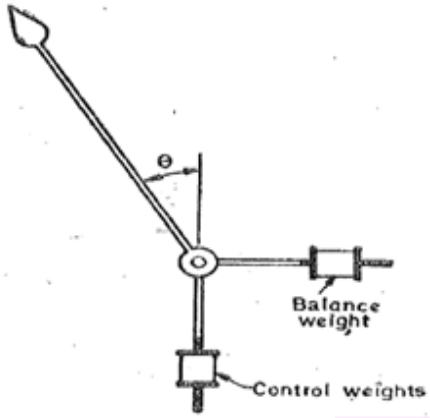


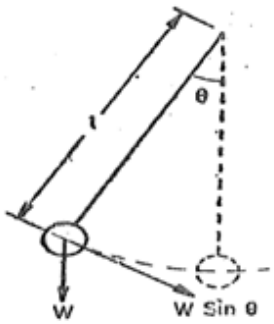


The advantages of gravity control system are:

- It is cheap
- Control is independent of temperature variations.
- It does not deteriorate with time.

The disadvantages of gravity control system are:

- This type of control can be used in only vertically mounted instruments.
- The instruments must be perfectly levelled.
- Since I α sinθ, the instrument does not have a uniform scale. It gives a cramped(compressed or crowded) scale at the lower end making it impossible to read the scale accurately.

**SPRING CONTROL**

- Hair-spring, usually of phosphor-bronze attached to the moving system exerts a controlling torque.
- Essential requirements for instrument springs are:
  - Non magnetic
  - Should be proof from mechanical fatigue
  - Small resistance
  - Cross sectional area must be sufficient to carry current without temperature rise
  - Have low resistance temperature coefficient.
  - Flat spiral springs are used commonly.

- With the deflection of the pointer- the spring is twisted in the opposite direction.
- Number of turns of the spring should be fairly large so that the deformation per unit length is small.
- This twist in the spring produces a restoring torque which is directly proportional to the angle of deflection of the moving system.
- To eliminate temperature effects, two springs coiled in opposite directions are used. When moving system deflects, one spring extends while the other is compressed.

$$T_c = \frac{E\,bt^3}{12l}\,\theta \text{ N-m}$$

$E$ = Young's modulus of spring material ; N/m²,

$b$ = width of spring ; m,

$t$ = thickness of spring ; m,

$l$ = length of spring ; m,

$\theta$ = angular deflection ; rad.

$$\therefore \quad T_c = K\theta$$

$$\text{where } K = \frac{E\,bt^3}{12l} \text{ N/rad}$$

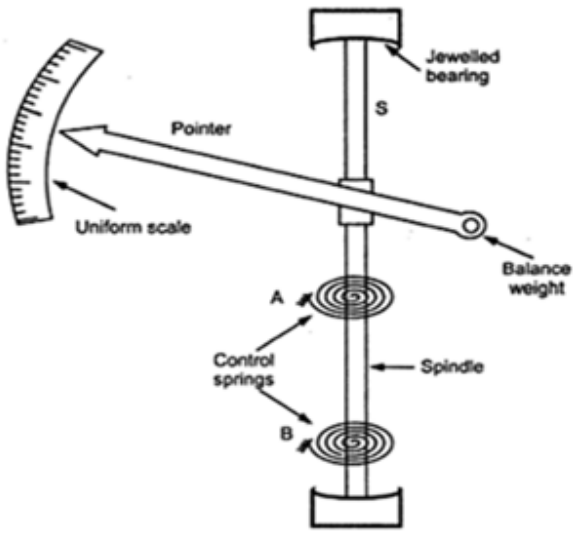


$T_d = K_d I$

At equillibrium, $T_c = T_d$ ; $K\theta = K_d I$; $\theta \propto I$

Hence uniform scale.

## COMPARISON

| Gravity control | Spring control |
|---|---|
| 1. Adjustable small weight used to produce Tc | 1. Hair spring used to produce Tc |
| 2. Tc → can be varied | 2. Tc → fixed |
| 3. Performance →Not Temperature dependent | 3. Performance → Temperature dependent |
| 4. Scale →Non uniform | 4. Scale → uniform |
| 5. Tc α sinθ | 5. Tc α θ |
| 6. Readings can't be taken accurately | 6. Readings taken accurately |
| 7. Systems used in vertical position only | 7. System need not be in vertical position |
| 8. Simple & cheap but delicate | 8. Simple and rigid but costlier |
| 9. Rarely used in indicating instrument | 9. Very popularly used in most instruments |

## METHODS FOR PRODUCING DAMPING TORQUE

- Air Friction or Pneumatic Damping
- Fluid Friction Damping
- Eddy Current Damping
- Electromagnetic Damping

Damping torque should be produced only when moving system is in motion.

Damping torque should be proportional to velocity of moving system but independent of operating current.

It must not effect the controlling torque or increase the static friction.

## AIR FRICTION OR PNEUMATIC DAMPING

- The arrangement consists of a light aluminium piston attached to the moving system.
- This piston moves in a fixed air chamber closed at one end.
- The clearance between piston and chamber wall is uniform throughout and is very small.
- When there are oscillations piston moves into and out of air chamber.
- When piston moves into the chamber, air inside is compressed and pressure of air thus built up, opposes the motion of piston and hence the whole moving system.
- When piston moves out of air chamber, pressure in the closed space falls, hence pressure on the open side of piston is greater than on other side. Thus there is again an opposition to motion.

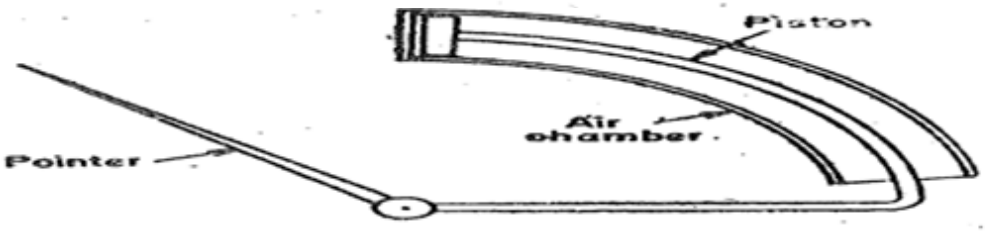


- Next arrangement consists of an aluminium vane which moves in a quadrant (sector) shaped air chamber.
- This air chamber is a recess cast in a bakelite moulding or die casting.
- The chamber is completed by providing a cover plate at the top.
- The aluminium piston should be carefully fitted so that it does not touch the wall otherwise serious error will be caused in readings.

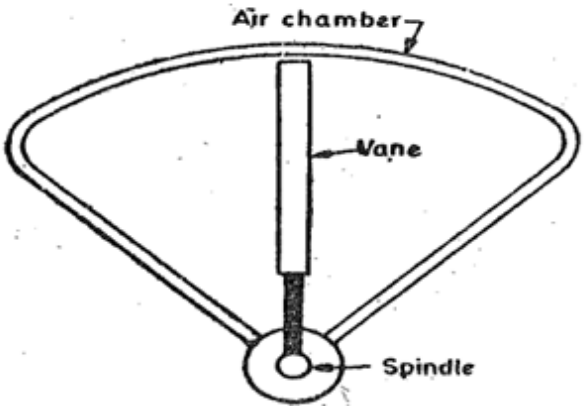

## FLUID FRICTION DAMPING

- Similar to air friction damping, but uses oil in place of air.
- As viscosity of oil is greater, damping force is also higher.
- A disc is attached to the moving system
- This disc dips into an oil pot and is completely submerged in oil.
- When moving system moves, the disc moves in oil.
- A frictional drag is produced which opposes motion.
- This frictional drag is zero when the disc is stationary and increases with the speed of the rotation of the disc.
- In next arrangement, vanes attached to spindle and submerged in oil, move in a vertical plane which gives greater damping torque.

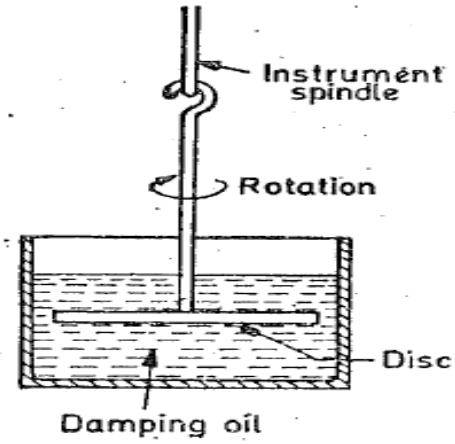


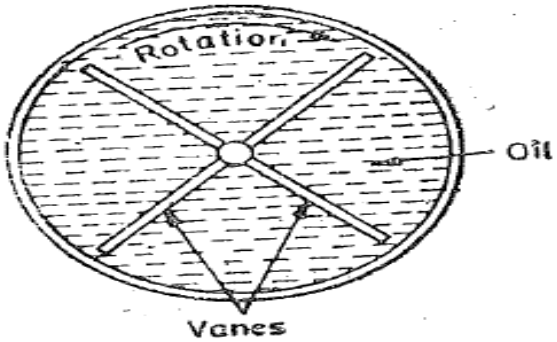


## ELECTROMAGNETIC DAMPING

- The movement of a coil in a magnetic field produces a current in the coil which interacts with the magnetic field to produce a torque.
- This torque opposes the movement of the coil and slows the response.
- The magnitude of current and hence damping torque is dependent upon resistance of the circuit to which instrument is connected.
- Used in galvanometers.

## EDDY CURRENT DAMPING

- When a conductor moves in a magnetic field an emf is induced in it and if a closed path is provided, a current (known as eddy current) flows.
- This current interacts with the magnetic field to produce an electromagnetic torque which opposes the motion.
- This torque is proportional to strength of magnetic field and current produced.
- Current is proportional to emf which in turn is proportional to velocity of conductor.
- If strength of magnetic field is constant (due to permanent magnet), torque is proportional to velocity of conductor.
- Most efficient form of damping.

- Two common forms are:

1. A metal former which carries the working coil of the instrument.

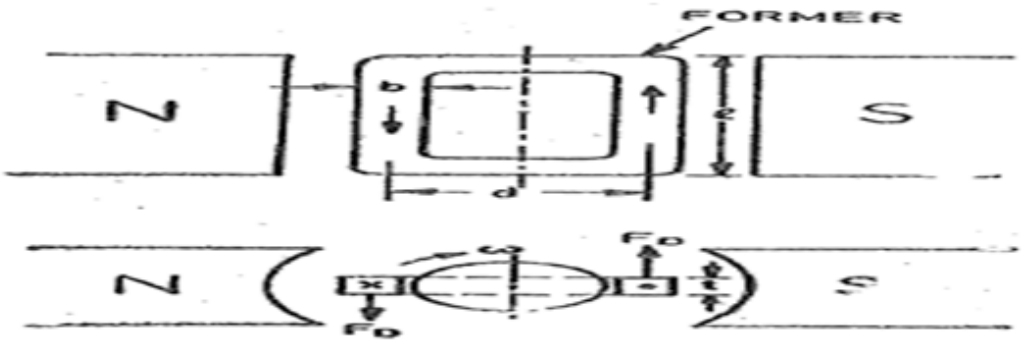


2. A thin aluminium disc attached to the moving system of the instrument. This disc moves in the field of a permanent magnet.

- Eddy currents are set up in it.
- The force that exists between these current and magnetic field is always in the direction opposing the motion and therefore, provide necessary damping.
- The magnitude of the induced current and therefore of the damping force which is dependent on it, is directly proportional to the velocity of moving system.

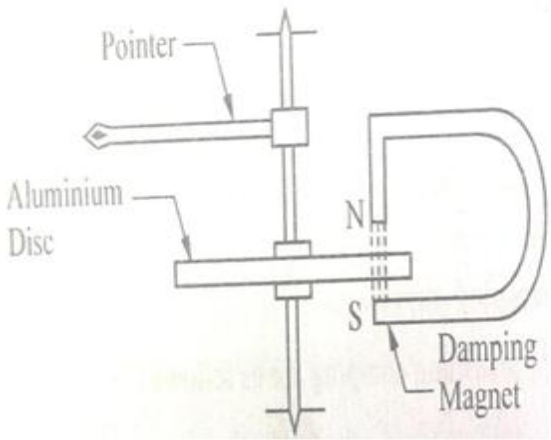


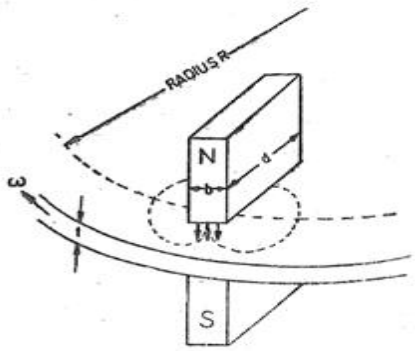


## CONSTRUCTIONAL DETAILS

Requirements of moving system are:

- Moving parts should be light – Aluminium material
- Frictional forces should be minimum.

1. Types of Supports used for the moving system depending upon the sensitivity required and operating conditions to be met:
   - Suspension, Taut suspension, Pivot and jewel bearings
2. Balancing
3. Torque /weight ratio
4. Permanent magnets
5. Pointers and scales

## 1. TYPES OF SUPPORTS

### 1. Suspension

- Consists of fine, ribbon shaped metal filament made of beryllium copper or phosphor bronze for upper suspension.
- Coil of fine wires for lower suspension
- Used in instruments of galvanometer class which require low friction and high sensitivity mechanism.

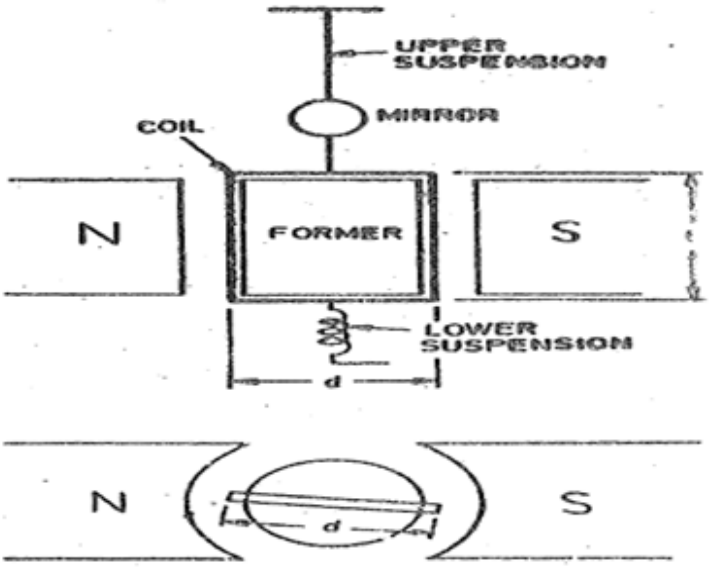


- Condition to be satisfied for effective operation is careful levelling.
- Application –laboratories
- Advantage -Use of suspension results in elimination of pivots, jewels and control springs and hence pivotless instruments are free from many defects
- Disadvantage –Not suitable for field use as moving system should be in vertical position.

### 2. Taut Suspension

- It has flat ribbon suspension both above and below the moving element.
- They are used in instruments of galvanometer class which require low friction and high sensitivity.
- can only be used in vertical position.
- Advantage is that exact levelling is not required.
- Results in elimination of pivots, jewels and control springs and therefore, pivot less instruments are free from many defects.

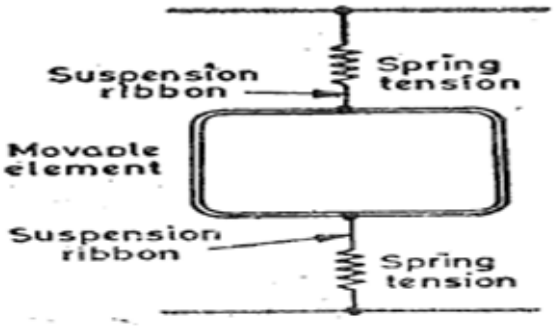

### 3. Pivot and jewel bearings

- Moving system is mounted on a spindle.
- Two ends of the spindle are made conical and polished to form pivots.
- Pivot – Hardened steel
- Pivot (sharpened spindle) is fitted in conical holes in jewel(frictionless bearing)
- Jewels - Sapphire
- Combination of steel and sapphire gives lowest friction.
- Frictional torque for jewel bearings, is proportional to area of contact between the pivot and jewel.

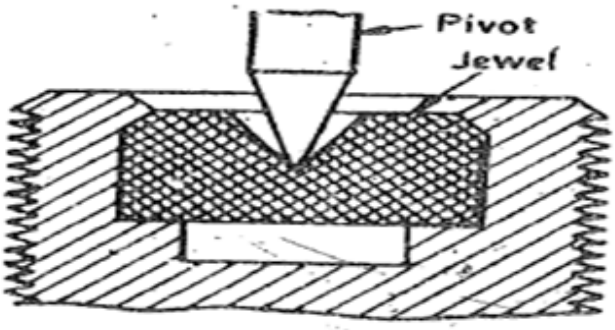


Fig. Jewel bearing.

- Thus contact area should be small.
- Contact area should not be too small otherwise the stress may exceed the crushing strength of the material of the pivot.
- To minimize the damage because of shocks, jewels are spring mounted and its bottom is also rounded.
- Instrument bearings are used dry as any lubricant may cause trouble because of gumming and by collected dust.
- Most instrument defects are due to excessive friction caused by damaged pivots and/or dirty jewel bearings, and due to damaged or distorted control springs.

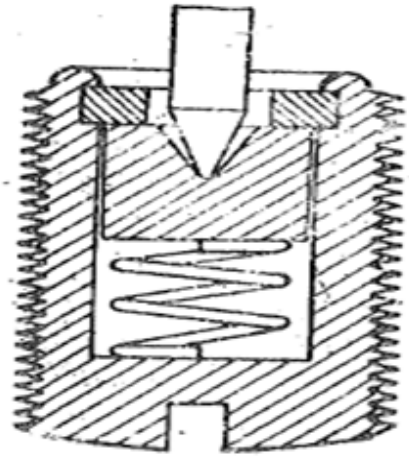

Fig. Spring loaded jewel beari g.

## 2. BALANCING

- For wear on the bearings to become uniform and symmetrical, centre of gravity of weight should coincide with the axis of spindle for all positions of pointer which avoids reading errors.
- Balance weight whose position is adjustable, compensates for weight of pointer and any other part attached to moving system.
- When determining magnitude of weight and distance at which they are placed, their effect on moving system must be considered.
  - Small weight at large distance increases moment of inertia, necessitating large damping torque
  - Large weight at short distance increases weight of moving system.

## 3. TORQUE (DEFLECTING) /WEIGHT RATIO

- Frictional torque depends upon the weight of moving parts.
- If weight is large, frictional torque will be large.
- It is desirable that frictional torque be as small as possible so that its effect on the deflecting torque is negligible.
- Deflecting torque/weight ratio gives the index of an instruments' performance
- Higher ratio – Better performance

## 4. PERMANENT MAGNETS

- Made of hard materials – having broad hysteresis loop(large coercive force) so that they are not subject to self demagnetization.
- In order that volume is small, $(BH)_{max}$ should be large.
- Materials used are:

  Old type- Carbon steel and other steel alloys containing chromium, tungsten and cobalt.

  New type- Aluminium nickel cobalt alloys like Alnico, Alini, Alcomax etc.
- Major requirement- strength should not change with time; no ageing effects.

## 5. POINTERS AND SCALES

- Weight and inertia of pointer must be small to reduce load on bearing and to avoid necessity of excessive damping torque.
- Pointer motion is limited by buffers or stops constructed as very light springs so that pointer is not bent when it strikes them sharply on sudden overload or reversal of operating current.
- Two classes:
  - Those intended for reading quickly(in the case of switchboard instruments at a distance)
  - Those intended for close accurate reading

## AMMETERS AND VOLTMETERS

- Essential requirements of a measuring instrument are:
  i. Its introduction into circuit does not alter the circuit conditions.
  ii. Power consumed by them for their operation is small.
- Ammeters are connected in series in the circuit whose current is to be measured. Ammeters should have a low electrical resistance so that they cause a small voltage drop and hence absorb small power ($I^2R_a$).
- Voltmeters are connected in parallel with the circuit whose voltage is to be measured. Voltmeters should have a high electrical resistance in order that the current drawn by them is small and hence the power ($V^2/R_v$) consumed is small.
- Action of ammeters and voltmeters depends upon a deflecting torque produced by an electric current.

## BASIC TYPES OF AMMETER AND VOLTMETER

There are two types of ammeter and voltmeter used in measurements, which depend for their action upon the magnetic effect of current.

- Permanent Magnet Moving Coil (PMMC) Instrument
- Moving Iron (MI) Instrument

| Sl. No. | Type of Instruments | Suitability for type of measurement | Type of control | Type of damping | Specialty |
|---|---|---|---|---|---|
| 1. | *Moving Coil* PMMC | dc measurement (current and voltage only) | Spring | Eddy current | It is most accurate type for dc measurements and most widely used for measurement of dc voltage, current and resistance. |
| 2. | *Moving Iron* | dc or ac measurement (current, voltage) | Spring or gravity control | Air friction | It is cheaper to manufacture and mostly used as an indicating instrument. It is very accurate for ac and dc, if properly designed. |

## PERMANENT MAGNET MOVING COIL (PMMC) INSTRUMENT

### Operating principle

- When d.c. supply is given to moving coil, d.c. current flows through it. When current carrying coil is kept in a magnetic field, it experiences a force, which produces a torque, and former rotates. The pointer is attached to the spindle. When former rotates, pointer moves over a calibrated scale.
- When polarity is reversed, a torque is produced in opposite direction. The mechanical stopper does not allow deflection in opposite direction. Hence, polarity should be maintained.

- In a.c., instrument does not operate because in the positive half, the pointer experiences a force in one direction and in the negative half, the pointer experiences a force in opposite direction. Due to the inertia of the pointer, it retains it's zero position.

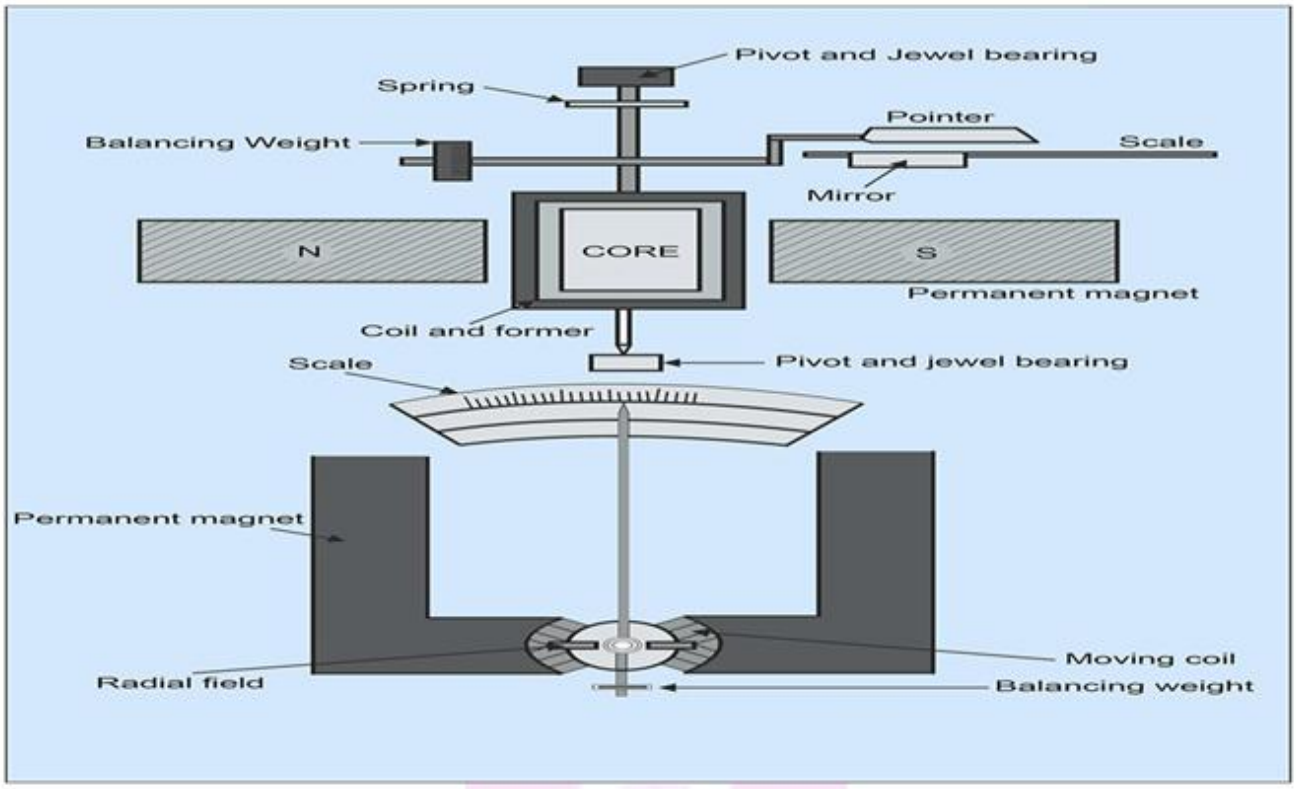


**Constructional details**

Main components are: Moving coil, Magnet Systems, Control, Damping, Pointer and Scale.

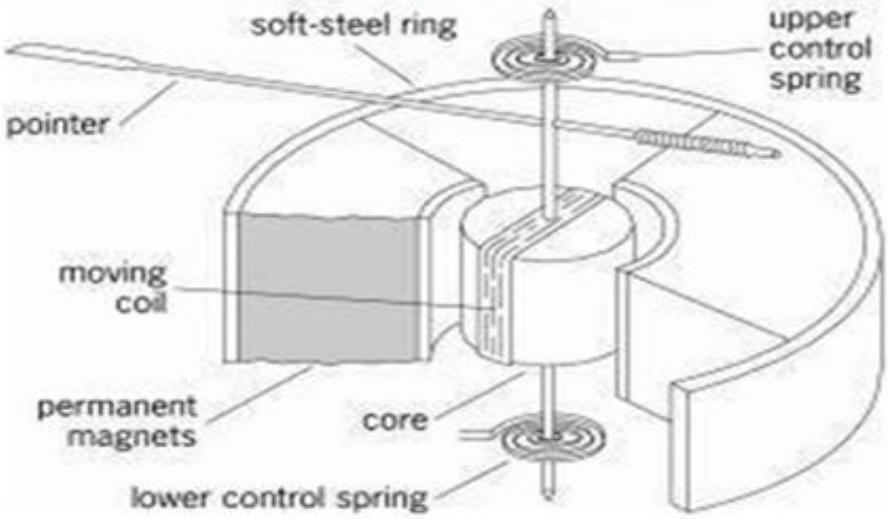


**Moving coil**

- It is wound with many turns of enamelled or silk covered copper wire.
- Coil is mounted on a rectangular aluminium former, which is pivoted on jewelled bearings.
- The coils move freely in the field of a permanent magnet.
- Most voltmeter coils are wound on metal frames to provide the required electro-magnetic damping.

- Most ammeter coils, however, are wound on non-magnetic formers, because coil turns are effectively shorted by the ammeter shunt. The coil itself, therefore, provides electromagnetic damping.

**Magnet Systems**

- Old style magnet system consisted of relatively long U shaped permanent magnets having soft iron pole pieces.
- Owing to development of materials like Alcomax and Alnico, which have a high coercive force, it is possible to use smaller magnet lengths and high field intensities.
- The flux densities used in PMMC instruments vary from 0.1 $Wb/m^2$ to 1 $Wb/m^2$.

**Control**

- When the coil is supported between two jewel bearings, two phosphor bronze hairsprings provide the control torque.
- These springs also serve to lead current in and out of the coil.
- The control torque is provided by the ribbon suspension as shown.
- This method is comparatively new and is claimed to be advantageous as it eliminates bearing friction.

**Damping**

- Damping torque is produced by movement of the aluminium former moving in the magnetic field of the permanent magnet.
- When the former oscillates eddy currents are produced which exerts a torque that damps the oscillations. Thus, pointer comes to final steady position quickly.

**Pointer and Scale**

- The pointer is carried by the spindle and moves over a graduated scale.
- The pointer is of lightweight construction.
- Careful alignment of pointer blade and its reflection in the mirror adjacent to scale helps to reduce parallax errors in the reading of the scale.
- The whole instrument is enclosed in a dust proof case.

**Torque Equation**

Let $T_d$ =deflecting torque, $T_C$ = controlling torque = $K\theta$

$\theta$ = angle of deflection of moving coil in radians

K=spring/ control/ restoring/ stiffness/ torsion constant (Nm/rad)

b=width of the coil, l=height of the coil or length of coil

N=No. of turns, i=current, B=Flux density, A=area of the coil

Force produced in the coil is given by F = Bil, For N turns, F = NBil

Torque produced, Td = F×⊥r distance = NBil×b = NBAi = Gi

Displacement constant, G = NBA = NBlb

For final steady deflection, Td = Tc; Kθ = Gi; θ = Gi/K

**Damping Torque**

Let the velocity of the coil is $\omega(t) = \frac{d\theta}{dt} rad./\sec.$, and let the resistance of the coil circuit with $N$ turns be $R\Omega$. Then the velocity of a coil side $v(t) = r\frac{d\theta}{dt}$ $(m/\sec.)$

$\therefore$ E.m.f induced in each turn of the coil = $2Blv = 2Blr\frac{d\theta}{dt}$ $volt.$ (note both the sides of the coil having same e.m.fs but they are additive in nature).

$\therefore$ Induced current across $N$ turns of coil = $\frac{2BlNr}{R}\frac{d\theta}{dt} = \frac{G}{R}\frac{d\theta}{dt}$ $amps.$ ($R$ = resistance of coil)

By Lenz's Law, torque produced = $Gi = G\frac{G}{R}\frac{d\theta}{dt} = \frac{G^2}{R}\frac{d\theta}{dt} = D\frac{d\theta}{dt}$ $(Nm)$ = opposing torque. Note, $D = \frac{G^2}{R}$ is the damping constant for the induced currents in the coil due to its motion. This damping torque is active when the coil posses a change in deflection.

**Equation of motion:** The resulting torque in a coil or motion of a coil in a magnetic field is due to the combined effect of deflecting torque ($T_d$), controlling torque ($\mathbf{K}\theta$) ,damping torque ($D\frac{d\theta}{dt}$)

**Deflecting torque tries to accelerate the system while inertia, damping and control torque try to retard the system.**

$J\frac{d^2\theta}{dt^2} + D\frac{d\theta}{dt} + \mathbf{K}\theta = Gi$ where $J$ is the moment of inertia of the moving parts.

**These constants are known as "Intrinsic Constants".**

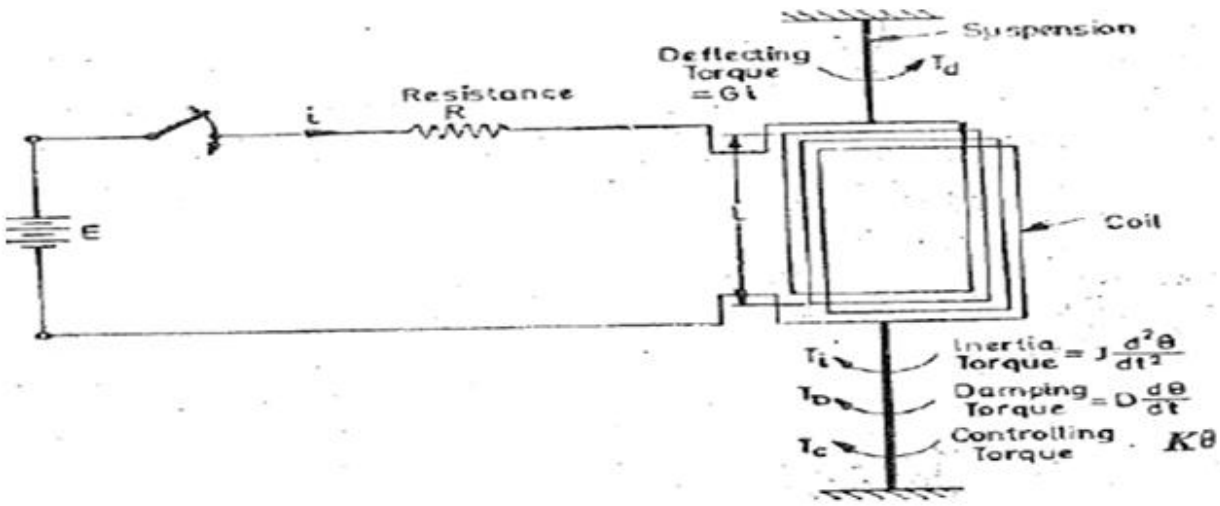

## EXTENSION OF RANGE OF PMMC INSTRUMENT

### Ammeter Shunts

- The basic movement of d.c. ammeter is a PMMC instrument.
- The coil winding of a basic movement is small and light and can carry very small currents since construction of an accurate instrument with a moving coil to carry currents greater than 100mA is impracticable owing to bulk and weight of coil required.
- So for heavy current measurements, major part of current is bypassed through a low resistance connected in parallel with the moving coil called "shunt". Hence only a small current flows through the moving coil.

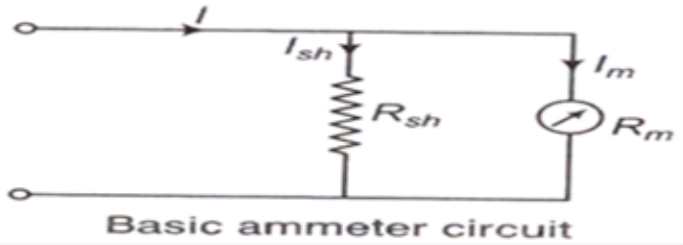

Basic ammeter circuit

Rm = Resistance of meter; Rsh=Resistance of shunt

Im = Current through meter; Ish =Current through shunt

I = current to be measured

Voltage across shunt and meter is same as they are connected parallel.

∴Vm =Vsh

$$I_{sh}R_{sh} = I_m R_m$$

$$I = I_{sh} + I_m$$

$$I_{sh} = I - I_m$$

$$R_{sh} = \frac{I_m}{I_{sh}} R_m$$

$$R_{sh} = \frac{I_m}{I - I_m} R_m$$

Ratio of total current to the current in the meter is called multiplying power of shunt.

$$m = \frac{I}{I_m} = \frac{I_{sh} + I_m}{I_m} = 1 + \frac{I_{sh}}{I_m} = 1 + \frac{R_m}{R_{sh}} = \frac{R_{sh} + R_m}{R_{sh}}$$

$$R_{sh}\, m = R_{sh} + R_m \quad \therefore (m-1)R_{sh} = R_m \quad \therefore R_{sh} = \frac{R_m}{m-1}$$

### General requirement for shunts

- Temperature coefficient of shunt and instrument should be low and nearly same as possible.
- Resistance of shunt should not vary with time.
- They should carry current without excessive temperature rise.
- They should have a low thermal e.m.f. with copper.

The material used for shunt construction is **Manganin** as it gives low thermal e.m.f. with copper although it is liable to corrosion and is difficult to solder.

Shunts for low currents are enclosed in meter casing but for currents above 200A, they are mounted separately so that heat produced can be effectively dissipated.

**Swamping resistance**

- To reduce the errors due to temperature change, a swamping resistance of Manganin having negligible temperature coefficient and having a resistance 20 to 40 times the coil resistance is connected in series with the coil and a shunt of Manganin is connected across this combination.
- Since copper forms a small fraction of the series combination, proportion in which currents would divide between meter and shunt would not change much with change in temperature.

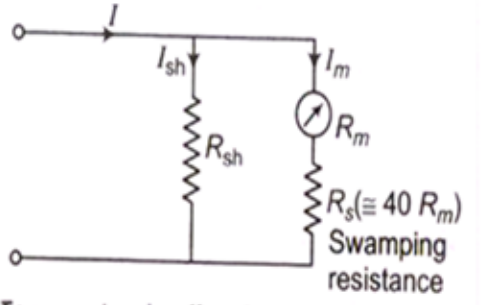


Temperature's effect in ammeter reading

**Multi-range Ammeter**

Current range of d.c. ammeter may be extended by number of shunts, selected by range switch. Such meter is multi-range ammeter.

**1. Using individual shunts**

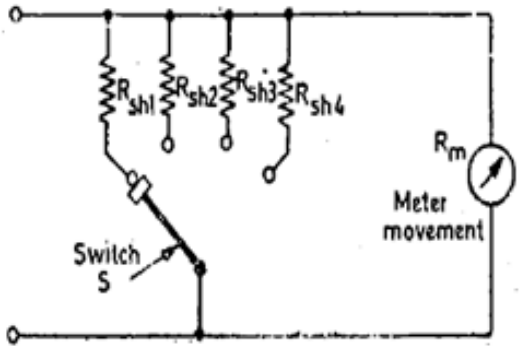


Circuit has four shunts, which can be put in parallel with meter to give four different currents.

$$R_{sh1} = R_m/(m_1 - 1),\ R_{sh2} = R_m/(m_2 - 1),$$
$$R_{sh3} = R_m/(m_3 - 1) \text{ and } R_{sh4} = R_m/(m_4 - 1)$$

- Can be used in range of 1-50 A
- When using, first use the maximum current range, then decrease the current range until good upscale reading is obtained.

**2. Using Universal or Ayrton shunt**

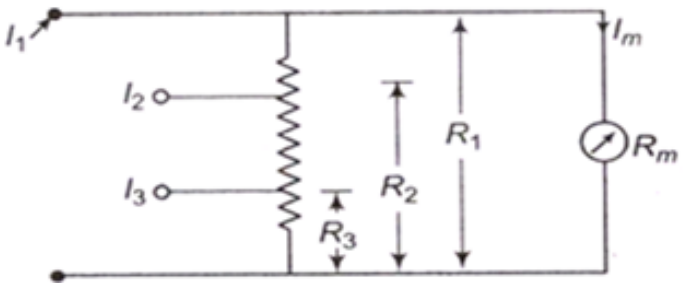

When switch is at position 1,

$$I_m R_m = (I_1 - I_m)R_1 \quad \therefore\ m_1 = I_1/I_m = 1 + R_m/R_1 \quad \text{or} \quad R_1 = R_m/(m-1)$$

For switch at position 2, $I_m(R_1 - R_2 + R_m) = (I_2 - I_m)R_2$ or $R_2 = (R_1 + R_m)/m_2$

For switch at position 3, $I_m(R_1 - R_3 + R_m) = (I_3 - I_m)R_3$ or $R_3 = (R_1 + R_m)/m_3$

**Voltmeter Multipliers**

A large resistance connected in series with voltmeter is called multiplier.

Large voltage can be measured using voltmeter of small rating with multiplier.

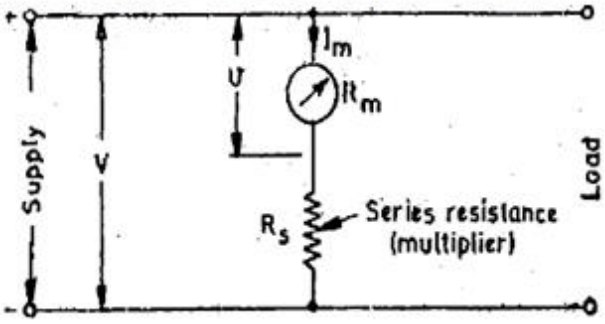


$R_s$ = multiplier resistance (Ω) $R_m$ = meter resistance (Ω)

$I_m = Ifs$ = full scale deflection current (A)

$v$ = voltage across the meter for producing current $I_m$ (A)

V = voltage to be measured (A)

$v = I_m R_m$

$V = I_m(R_m + R_s)$ $\qquad R_s = \dfrac{V - I_m R_m}{I_m} = \dfrac{V}{I_m} - R_m$

Now multiplying factor for multiplier

$$m = \frac{V}{v} = \frac{I_m(R_m + R_s)}{I_m R_m} = 1 + \frac{R_s}{R_m} \qquad \therefore\ R_s = (m-1)R_m$$

**General requirement for multipliers**

- Their resistance should not vary with time.
- The change in their resistance with temperature should be small.
- They should be non-inductively wound for a.c.meters.

The resistance materials used for multipliers are **Manganin** and **Constantan**.

The multiplier resistance used in series with coil is usually made of Manganin having negligible resistance temperature coefficient. Since series resistance of multiplier is very much greater than coil resistance (which is of copper), variations of resistance of Rm due to temperature changes are swamped by resistance Rs of multiplier.

**Multi-range Voltmeter**

**1. Using individual multipliers**

Different voltage ranges can be obtained by connecting different values of multiplier resistors in series with meter by a range selector switch.

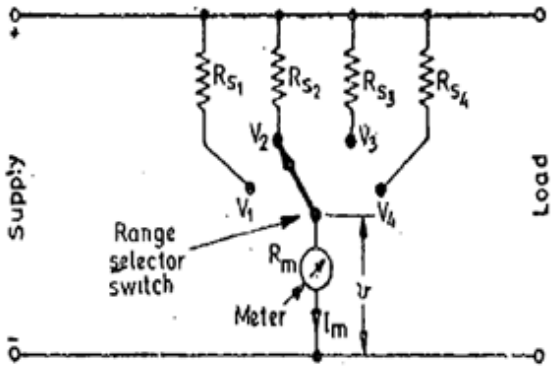


$R_{s1}=(m_1-1)\,R_m,\ R_{s2}=(m_2-1)\,R_m$

$R_{s3}=(m_3-1)Rm,\ R_{s4}=(m_4-1)\,R_m$

where $m_1=\dfrac{V_1}{v}$, $m_2=\dfrac{V_2}{v}$, $m_3=\dfrac{V_3}{v}$ and $m_4=\dfrac{V_4}{v}$

**2. Using Potential Divider Arrangement**

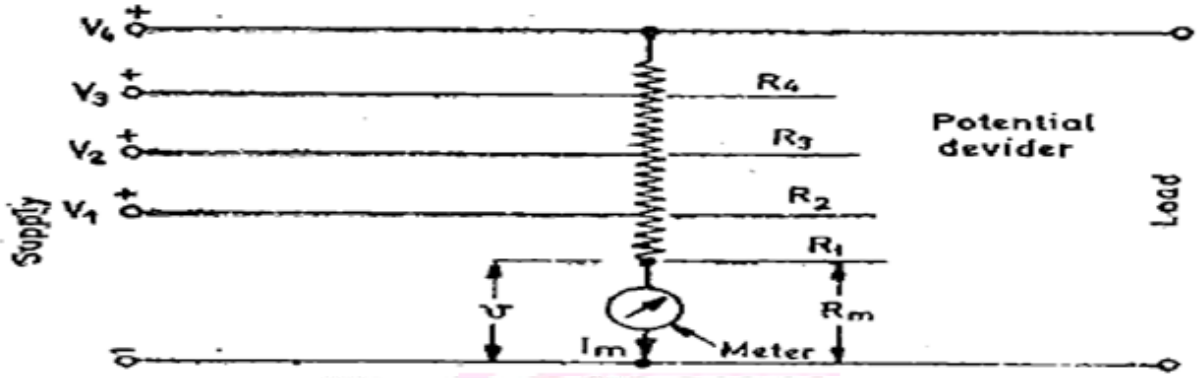


$$R_1=\frac{V_1}{I_m}-R_m=\frac{V_1}{v/R_m}-R_m=m_1R_m-R_m=(m_1-1)R_m$$

$$R_2=\frac{V_2}{I_m}-R_m-R_1=\frac{V_2}{v/R_m}-R_m-(m_1-1)\,R_m$$

$$=m_2R_m-R_m-(m_1-1)\,R_m=(m_2-m_1)R_m$$

Similarly $\quad R_3=\dfrac{V_3}{I_m}-R_m-R_1-R_2=(m_3-m_2)R_m$

and $\quad R_s=\dfrac{V_4}{I_m}-R_m-R_1-R_2-R_3=(m_4-m_3)R_m$

*A moving-coil instrument gives the full-scale deflection of 10 mA when the potential difference across its terminals is 100 mV. Calculate (a) the shunt resistance for a full-scale deflection corresponding to 100 A, and (b) the series resistance for full scale reading with 1000 V. Calculate the power dissipation in each case.*

Meter current $\quad I_m=10$ mA.

Meter resistance $\quad R_m=\dfrac{100\text{ mV}}{10\text{ mA}}=10\ \Omega.$

(*a*) Shunt multiplying factor $\quad m=\dfrac{I}{I_m}=\dfrac{100}{10\times10^{-3}}=10{,}000.$

$\therefore$ Shunt resistance $\quad R_{sh}=\dfrac{R_m}{m-1}=\dfrac{10}{10{,}000-1}\simeq0{\cdot}001\ \Omega.$

Power dissipation $\quad vI=(100\times10^{-3})\times100=10$ W.

(*b*) Voltage multiplying factor $m=\dfrac{V}{v}=\dfrac{1000}{100\times10^{-3}}=10{,}000.$

$\therefore$ Multiplier resistance $\quad R_s=(m-1)\,R_m=(10{,}000-1)\times10\simeq100{,}000\ \Omega.$

Power dissipation $\quad=V\,I_m=(1000)\,(10\times10^{-3})=10$ W.

**Errors in PMMC instrument**

- To reduce frictional errors, torque to weight ratio is made very high.
- Changes in temperature changes the resistance of working coil, causing large errors. Such an error is not serious in ammeters. In voltmeters, a large series resistance of very low temperature coefficient is used to reduce temperature errors.
- Ageing of permanent magnets and control springs may introduce errors. Weakening of magnet causes less deflection while weakening of control springs cause large deflection, for a particular value of current. Proper use of material and pre-ageing during manufacture can reduce these errors.

**Advantages of PMMC instrument**

- It has uniformly divided scale and can cover upto $270^0$ or more.
- The power consumption is very low as 25 μW to 200 μW.
- The torque-weight ratio is high which gives high accuracy. Accuracy is of the order of generally 2- 5% of full-scale deflection.
- A single instrument may be used for many different current and voltage ranges by using different values for shunts and multipliers.
- Sensitivity is high.
- Free from hysteresis loss as former is of aluminium.
- No effect of stray magnetic fields because of use of intensive polarised or unidirectional field.
- Since the operating forces are large because of large flux densities which may be as high as $0.5 Wb/m^2$ the errors due to stray magnetic fields are negligible. It has efficient eddy current damping characteristics and hence not affected by stray magnetic field.
- Self-shielding magnets make the core magnet mechanism useful in aircraft and aerospace applications where multiplicities of instruments are mounted in close proximity to each other. This results in elimination of iron cases and hence weight reduction.
- Reliable.

**Disadvantages of PMMC instrument**

- These are useful only for d.c. Torque reverses if current reverses. If connected to a.c., the pointer cannot follow the rapid reversals and the deflection corresponds to mean torque, which is zero.
- Moving system is very delicate - easily damages by rough handling.
- The coil being very fine, cannot withstand prolonged overloading.
- Costlier compared to moving iron instruments.
- Ageing of permanent magnets and control springs may introduce errors, which can be eliminated by careful use of material and pre-ageing during manufacture.
- Friction and temperature might introduce errors.

**Applications of PMMC instrument**

- PMMC instruments can be used as d.c. ammeter. Range can be increased by using a low resistance in parallel with the instrument.
- The range of this instrument, when used as a d.c. voltmeter can be increased by using a high resistance in series with it.

**MOVING IRON (MI) INSTRUMENT**

- Moving Iron instruments depend for their action upon the magnetic effect of current, and are widely used as indicating instruments.
- In this type of instrument, the coil is stationary and the deflection is caused by a soft-iron piece moving in the field produced by the coil.
- There are two types of moving iron instruments:
  - Attraction type
  - Repulsion type

**Main Components are:**

- **Moving element:** Small piece of soft iron in the form of vane or rod.
- **Coil:** to produce the magnetic field due to current flowing through it and to magnetize the iron pieces. In repulsion type, fixed vane or rod is also used and magnetized with the same polarity.
- **Control torque** is provided by spring or weight (gravity).
- **Damping torque** is normally pneumatic. The damping device consisting of an air chamber and a moving vane or piston attached to the instrument spindle. In MI instruments, operating magnetic field is very weak and hence eddy current damping is not used, as introduction of a permanent magnet required for eddy current damping would distort the operating magnetic field.
- **Deflecting torque** produces movement on aluminium pointer over a graduated scale.

**Attraction Type – Constructional details**

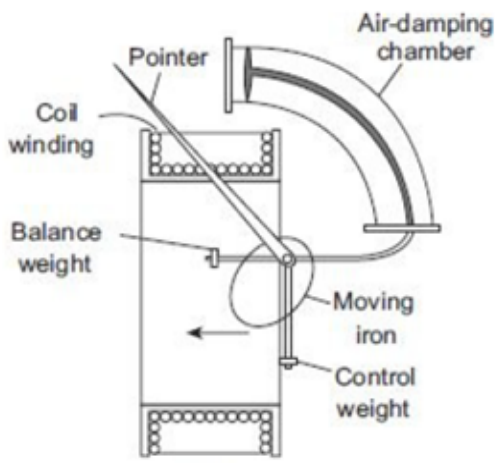

- Flat coil with narrow slot like opening or a solenoid is kept fixed.
- Moving iron is a flat disc or a sector or an oval- shaped soft- iron piece eccentrically mounted.
- The controlling torque is provided by springs but gravity control can be used in vertically mounted panel type instruments.
- Damping is provided by air friction with help of aluminium piston or vane, attached to spindle, which moves in a closed air chamber.

**Attraction Type – Operating Principle**

- When the instrument is connected in the circuit to measure current or voltage, the operating current flowing through the coil sets up a magnetic field. In other words, the coil behaves like a magnet and therefore it attracts the soft iron piece towards it. The result is that the pointer attached to the moving system moves from zero position. The pointer will come to rest at a position where deflecting torque is equal to the controlling torque.
- If current in the coil is reversed, direction of magnetic field also reverses and so does the magnetism produced in soft iron piece. Thus whatever be the direction of current in coil, vane is always attracted into coil. Therefore, direction of deflecting torque remains unchanged. Hence can be used for both d.c. and a.c. measurements.

**Repulsion Type - Constructional details**

- It consists of two soft-iron pieces or vanes inside a fixed coil carrying the operating current. One of these vanes is fixed and the other is movable. The fixed vane is attached to the stationary coil and the movable vane to the spindle of the instrument to which a pointer is attached.
- Controlling torque is provided by spring. Gravity control can also be used in vertically mounted instruments. It may be noted that in this instrument, springs do not provide electrical connections.
- Damping is provided by air friction due to motion of a piston in a closed air chamber.

Two different designs are in common use:

1. Radial Vane Type -Vanes are radial strips of iron placed within coil.

2. Co-axial or Concentric Vane Type - Fixed and moving vanes are sections of coaxial cylinders.

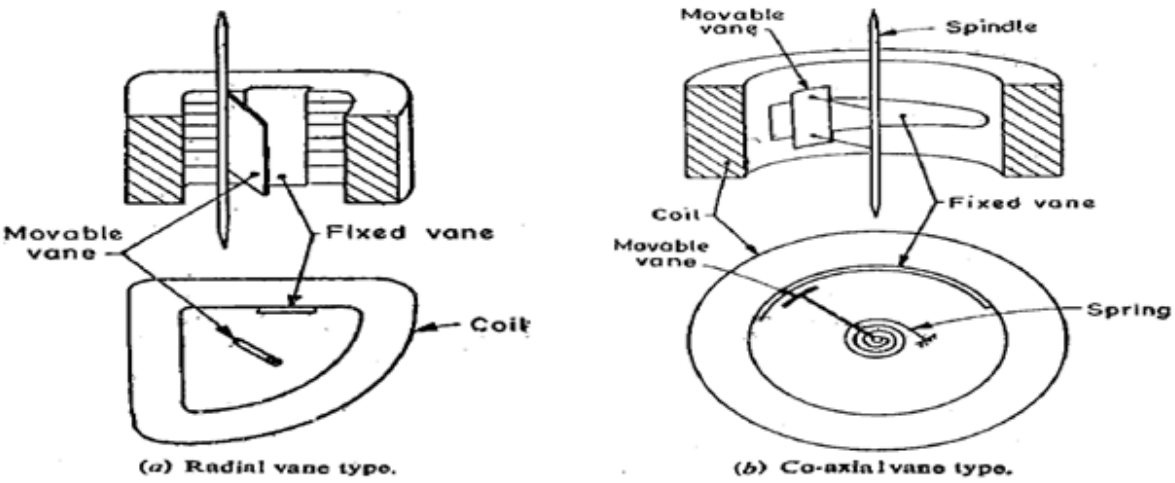


(a) Radial vane type. (b) Co-axial vane type.

## Repulsion Type – Operating Principle

- When current to be measured or current proportional to the voltage to be measured flows through the coil, a magnetic field is setup by the coil. This magnetic field magnetises the two vanes in the same direction i.e. similar polarities are developed at the same ends of the vanes. Since the adjacent edges of the vanes are of the same polarity, the two vanes repel each other. As the fixed vane cannot move, the movable vane deflects and causes the pointer to move from zero position. The pointer will come to rest at a position where deflecting torque is equal to controlling torque provided by the spring.
- If the current in the coil is reversed, the direction of deflection remains unchanged. It is because reversal of the field of the coil reverses the magnetisation of both iron vanes so that they repel each other regardless which way current flows through the coil. For this reason, such instruments can be used for both d.c. and a.c. applications.

## Torque Equation

Expression for torque may be derived by considering energy relation when there is a small increment in current supplied. This result in a small deflection dθ and some mechanical work will be done.

Let Td be the deflecting torque.

Mechanical work done = torque × angular displacement = Td . dθ

Due to change in inductance, there will be change in energy stored in magnetic field.

Let I be initial current, L instrument inductance and θ deflection.

Let current increases by dI, deflection changes by dθ and inductance by dL.

In order to effect an increment dI in the current, the applied voltage must increase by

$$e = \frac{d\phi}{dt} = \frac{d}{dt}(LI) = I\frac{dL}{dt} + L\frac{dI}{dt}$$

The electrical energy supplied is $eIdt = I^2dL + ILdI$

Current is changed from I to (I + dI), and inductance L to (L + dL).

Stored energy changes from

$$\frac{1}{2}I^2L \text{ to } \frac{1}{2}(I+dI)^2(L+dL)$$

Hence the change in stored energy $= \frac{1}{2}(I+dI)^2(L+dL) - \frac{1}{2}I^2L$

$$= \frac{1}{2}(I^2 + dI^2 + 2I\,dI)(L+dL) - \frac{1}{2}I^2L$$

$$= \frac{1}{2}I^2L + \frac{1}{2}I^2\,dL + \frac{1}{2}L\,dI^2 + \frac{1}{2}dL\,dI^2 + IL\,dI + I\,dI\,dL - \frac{1}{2}I^2L$$

As dI and dL are very small, neglecting second and higher order terms, this becomes

$$ILdI + \frac{1}{2}I^2dL$$

From the principle of conservation of energy,

Electrical energy supplied= Increase in stored energy + Mechanical work done.

$$I^2dL + ILdI = ILdI + \frac{1}{2}I^2dL + T_d d\theta$$

$$\therefore \quad T_d d\theta = \frac{1}{2}I^2dL$$

or deflecting torque $T_d = \frac{1}{2}I^2\frac{dL}{d\theta}$

where Td in Newton-metre, I in Ampere, L in Henry and θ in Radian.

Moving system is provided with control springs and the deflecting torque Td is balanced by the controlling torque $T_C = K\theta$ where K is control spring constant(Nm/rad) and θ is deflection(rad).

At final steady position, $T_C = T_d$,

$$k\theta = \frac{1}{2}I^2\frac{dL}{d\theta} \quad \therefore \text{ deflection} \quad \theta = \frac{1}{2}\frac{I^2}{k}\frac{dL}{d\theta}$$

Hence, deflection is proportional to square of the rms value of the operating current. The deflecting torque is, therefore, unidirectional (acts in same direction) whatever may be the polarity of the current.

**SHUNTS FOR MOVING IRON INSTRUMENTS**

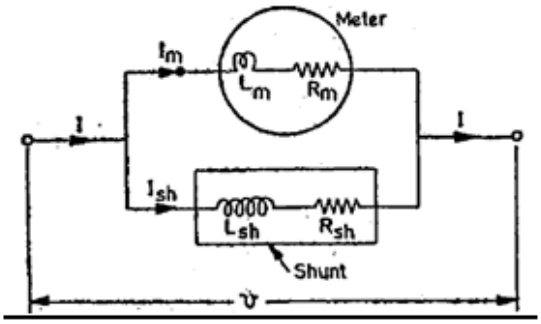

let $R_m$ *and* $L_m$ are respectively the resistance and inductance of the coil $R_{sh}$ *and* $L_{sh}$ the corresponding values for shunt.

The ratio of currents in two parallel branches is inverse ratio of their impedences.

$$\frac{I_{sh}}{I_m} = \sqrt{\frac{R_m^2 + (\omega L_m)^2}{R_{sh}^2 + (\omega L_{sh})^2}} = \frac{R_m\sqrt{1+\left(\frac{\omega L_m}{R_m}\right)^2}}{R_{sh}\sqrt{1+\left(\frac{\omega L_{sh}}{R_{sh}}\right)^2}}$$

The above ratio will be independent of frequency $\omega$ provided that the time constants of the two parallel branches are same i.e $\frac{L_m}{R_m} = \frac{L_{sh}}{R_{sh}}$

In other words, $\frac{I_{sh}}{I_m} = \frac{R_m}{R_{sh}}$ if $\frac{L_{sh}}{R_{sh}} = \frac{L_m}{R_m}$

Now,

$$I = I_{sh} + I_m = I_m\frac{R_m}{R_{sh}} + I_m = I_m\left(1+\frac{R_m}{R_{sh}}\right)$$

Multipliers for the shunt $= \left(1+\frac{R_m}{R_{sh}}\right)$.

## MULTIPLIERS FOR MOVING IRON INSTRUMENTS

**For moving-iron voltmeters:** Voltmeter range may be altered connecting a resistance in series with the coil. Hence the same coil winding specification may be employed for a number of ranges. Let us consider a high resistance $R_{se}$ is connected in series with the moving coil and it is shown below.

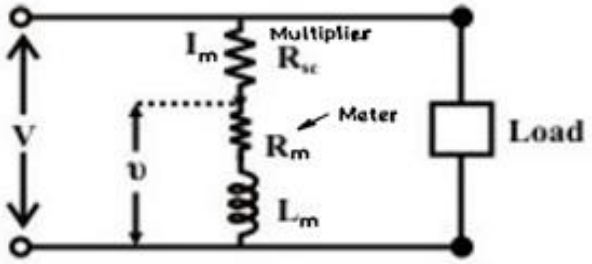


**$R_{se}$ is almost purely non inductive resistance of large value**

$$v = I_m\sqrt{R_m^2 + (\omega L_m)^2}$$

$$V = I_m\sqrt{(R_{se} + R_m)^2 + (\omega L_m)^2}$$

$$\text{Multiplier} = m = \frac{V}{v} = \frac{\sqrt{(R_{se} + R_m)^2 + (\omega L_m)^2}}{\sqrt{R_m^2 + (\omega L_m)^2}}.$$

Thus voltage multiplying power, m will change with change in frequency.

In order to compensate for errors caused by change of multiplying power with change of frequency, multiplier may be shunted by a capacitor selected in such a manner that the capacitive reactance cancels the inductive reactance of the coil.

## Advantages of Moving Iron Instruments

- Suitable for measuring both d.c. and a.c.
- Less friction errors as torque- weight ratio is high.
- Relatively cheap.
- Robust due to simple construction with no current carrying moving parts.
- Accurate if properly designed.
- Scale span upto$240^0$.
- Can withstand overload momentarily.

## Disadvantages of Moving Iron Instruments

1. As deflection is proportional to $I^2$, scale of the instrument is non-uniform. It is cramped at lower end and expanded in upper portion. So accurate readings are not possible at lower end.
2. Power consumption is higher for low voltage range.
3. Since large amount of power is consumed to supply $I^2R$ loss in coil and magnetic losses in vanes, it is not a very sensitive instrument.
4. This instrument will always have to be put in the vertical position if it uses gravity control.
5. It is subjected to errors due to hysteresis, temperature, frequency changes and stray magnetic fields.
   - Stiffness of spring decreases with increase in temperature.
   - Measurement cannot be calibrated with high degree of precision for d.c. due to hysteresis. But, hysteresis presents no problem for a.c. The hysteresis error may be minimized by using vanes of nickel-iron alloy.
   - When used for measuring a.c., reading may be affected by variation of frequency due to change in reactance of coil, which has some inductance. With increase in frequency, iron losses and coil impedance increases.

## Applications of Moving Iron Instruments

**As ammeter:** It may be constructed for full-scale deflection of 0.1 to 50A without the use of shunts or current transformers.
**As voltmeter:** A high non-inductive resistance R connected in series known as multiplier extends the range upto 750V.

# MODULE – 2

# MEASUREMENT OF RESISTANCE, POWER AND ENERGY

2.1 Measurement of power: Dynamometer type wattmeter –Construction and working - 3-phase power measurement -Low Power factor wattmeters.

2.2 Measurement of energy: Induction type watt - hour meters -Single phase energy meter – construction and working, two element three phase energy meters, Digital Energymeters - Time of Day (TOD) and Smart metering (description only).

2.3 Current transformers and potential transformers – principle of working - ratio and phase angle errors. Extension of range using instrument transformers, Hall effect multipliers.

## MEASUREMENT OF POWER

### Dynamometer type Wattmeter

In Electrodynamic or Electrodynamometer type instruments, the operating field is produced by an electromagnet not by a permanent magnet. These instruments are transfer instruments (calibrated with a DC source and then used without modification to measure AC)

### Construction

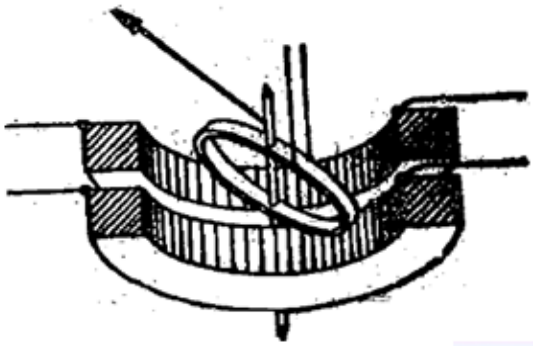

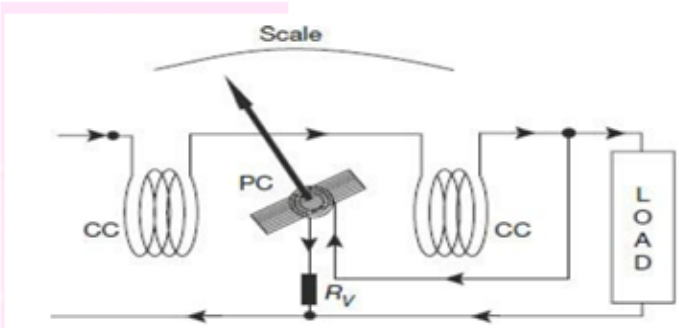


- **Fixed coils or field coils** are connected in series with load and so carry current in circuit. They form **Current Coil (C.C.)** of wattmeter. They are divided into two halves to give more uniform field near the centre and to allow passage of instrument shaft. They are wound with heavy wire to carry main current. They are stranded or laminated if necessary to reduce eddy current losses.
- **Moving coil** is connected across load and therefore carries a current proportional to voltage. It is called **Pressure Coil (P.C.)** or **voltage coil** of wattmeter. It is mounted on a pivoted aluminium spindle and is wound either as a self-sustaining coil or else on a non-metallic former. A high non-inductive resistance is connected in series with moving coil to limit current to a small value.
- **Control**:Controlling torque is provided by two-control spring which act as leads to moving coil.
- **Damping**: Air friction damping is employed by a light aluminium vane, which moves in a sector, shaped chamber. Eddy current damping cannot be used because it requires a permanent magnet, which will distort the weak operating magnetic field (weak because coils are air cored).
- **Scales and Pointers**: Mirror type scales and knife-edge pointers are used to remove reading errors due to parallax.

**Operating Principle**

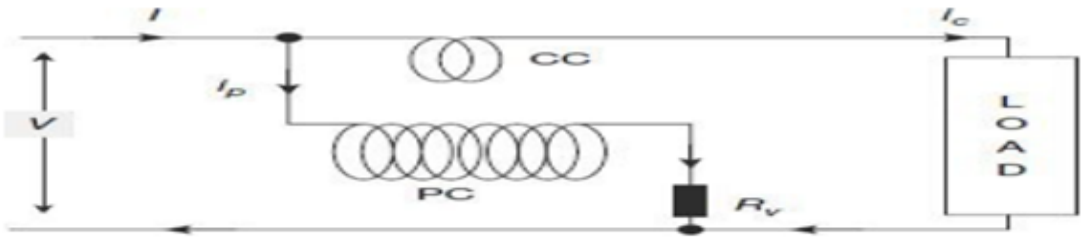


Wattmeter is connected such that current proportional to load voltage flows in pressure coil and current proportional to load current flows in current coil. Strength of magnetic fields depends on values of current flowing through coils. Wattmeter reading depends on product of two magnetic fields. Mutual inductance between moving and fixed coil varies as moving coil moves and deflecting torque is affected due to change in mutual inductance.

$V$ = voltage to be measured (rms)

$I$ = current to be measured (rms)

$i_P$ = voltage (pressure) coil instantaneous current

$i_C$ = current coil instantaneous current

$R_V$ = external resistance connected with pressure coil

$R_P$ = resistance of pressure coil circuit (PC resistance + $R_V$)

$M$ = mutual inductance between current coil and pressure coil

$\theta$ = angle of deflection of the moving system

$\omega$ = angular frequency of supply in radians per second

$\varphi$ = phase-angle lag of current $I$ with respect to voltage $V$

Instantaneous torque of the electrodynamometer wattmeter is given by

$$T_i = i_P i_C \frac{dM}{d\theta}$$

Instantaneous value of voltage across the pressure-coil circuit is

$$v_P = \sqrt{2} \times V \sin \omega t$$

If the pressure coil resistance can be assumed to be very high, the whole pressure coil can be assumed to be behaving like a resistance only. The current $i_P$ in the pressure coil thus, can be assumed to in phase with the voltage $v_P$, and its instantaneous value is

$$i_P = {}^{v_P}\!/_{R_P} = \sqrt{2} \times {}^{V}\!/_{R_P} \sin \omega t = \sqrt{2} \times I_P \sin \omega t$$

where $I_P = V/R_P$ is the rms value of current in pressure coil.

Assuming that the pressure-coil resistance is sufficiently high to prevent branching out of any portion of the supply current towards the pressure coil, the current coil current can be written as

$$i_C = \sqrt{2} \times I \sin(\omega t - \varphi)$$

$$T_i = \sqrt{2} \times I_p \sin\omega t \times \sqrt{2} \times I \sin(\omega t - \varphi)\frac{dM}{d\theta}$$
$$= 2I_pI \sin\omega t \sin(\omega t - \varphi)\frac{dM}{d\theta}$$
$$= I_pI\{\cos\varphi - \cos(2\omega t - \varphi)\}\frac{dM}{d\theta}$$

Average deflecting torque over a complete cycle is

$$T_d = \frac{1}{T}\int_0^T T_i\, d\omega t = \frac{1}{2\pi}\int_0^{2\pi} I_pI\{\cos\varphi - \cos(2\omega t - \varphi)\}\frac{dM}{d\theta}\, d\omega t$$
$$= \frac{I_pI}{2\pi}\left[\omega t\cos\varphi\right]_0^{2\pi}\frac{dM}{d\theta}$$
$$= I_pI\cos\varphi\frac{dM}{d\theta}$$
$$= \frac{V}{R_p}I\cos\varphi\frac{dM}{d\theta}$$
$$= \frac{VI\cos\varphi}{R_p}\frac{dM}{d\theta}$$

With a spring constant $K$, the controlling torque provided by the spring for a final steady-state deflection of $\theta$ is given by

$$T_C = K\theta$$

Under steady-state condition, the average deflecting torque will be balanced by the controlling torque provided by the spring. Thus, at balanced condition $T_C = T_d$

$$T_C = T_d$$
$$K\theta = \frac{VI\cos\varphi}{R_p}\frac{dM}{d\theta}$$
$$\theta = \frac{VI\cos\varphi}{KR_p}\frac{dM}{d\theta}$$
$$\theta = \left(K_1\frac{dM}{d\theta}\right)P$$

where, $P$ is the power to be measured and $K_1 = 1/KR_p$ is a constant.

Steady-state deflection $\theta$ is thus found to be an indication of the power $P$ to be measured.

## ERRORS IN ELECTRODYNAMOMETER WATTMETERS

### 1. Pressure Coil Inductance

In an ideal dynamometer type wattmeter, current in pressure coil is in phase with applied voltage since pressure coil is assumed to be purely resistive. However, practically pressure coil has an inductance and hence current in it lags behind applied voltage. This will introduce errors unless required compensations are taken care of.

$V$ = voltage applied to the pressure coil circuit (rms)
$I$ = current in the current coil circuit (rms)
$I_P$ = current in the voltage (pressure) coil circuit (rms)
$r_P$ = resistance of pressure coil only , $L$ = inductance of pressure coil
$R_V$ = external resistance connected with pressure coil
$R_P$ = resistance of pressure coil circuit (PC resistance + $R_V$)
$Z_P$ = impedance of pressure coil circuit
$M$ = mutual inductance between current coil and pressure coil
$\omega$ = angular frequency of supply in radian per second
$\varphi$ = phase-angle lag of current $I$ with respect to voltage $V$

current through the pressure coil will lag the voltage across it by a certain angle given by

$$\alpha = \tan^{-1}\left(\frac{\omega L}{R_p}\right) = \tan^{-1}\left(\frac{\omega L}{r_p + R_V}\right)$$

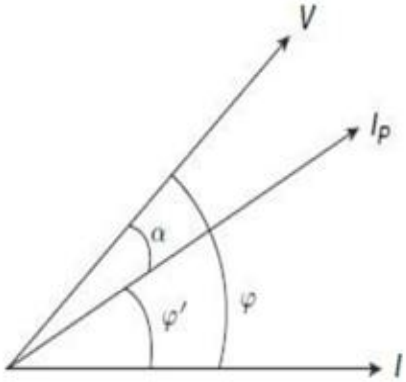


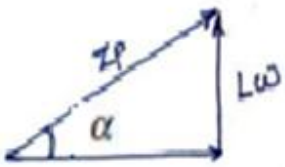


$$\cos\alpha = \frac{R_P}{Z_P}$$

$R_P = (r_p + R)$

$$\varphi' = \varphi - \alpha$$

wattmeter deflection will be $\theta' = \frac{I_P I}{K}\cos\varphi' \cdot \frac{dM}{d\theta}$

$$\theta' = \frac{V}{Z_P K} I \cos(\varphi - \alpha) \cdot \frac{dM}{d\theta}$$

Relating to $R_P = Z_P \cos\alpha$ in the pressure coil circuit, the wattmeter deflection

$$\theta' = \frac{VI}{R_P K}\cos\alpha \cdot \cos(\varphi - \alpha) \cdot \frac{dM}{d\theta}$$

In the absence of inductance, $Z_P = R_P$ and $\alpha = 0$; wattmeter in that case will read true power, given by,

$$\theta = \frac{VI}{R_P K}\cos\varphi \frac{dM}{d\theta}$$

Taking the ratio of true power indication to actual wattmeter reading, we get

$$\frac{\text{True power indication}}{\text{Actual wattmeter reading}} = \frac{\theta}{\theta'} = \frac{\frac{VI}{R_p K}\cos\varphi \frac{dM}{d\theta}}{\frac{VI}{R_p K}\cos\alpha \cdot \cos(\varphi-\alpha) \cdot \frac{dM}{d\theta}} = \frac{\cos\varphi}{\cos\alpha \cdot \cos(\varphi-\alpha)}$$

Thus, the correction factor can be identified as

$$CF = \frac{\cos\varphi}{\cos\alpha \cdot \cos(\varphi-\alpha)}$$

True power indication = CF X Actual wattmeter reading

For leading power factor loads, however, the wattmeter phasor diagram will be as

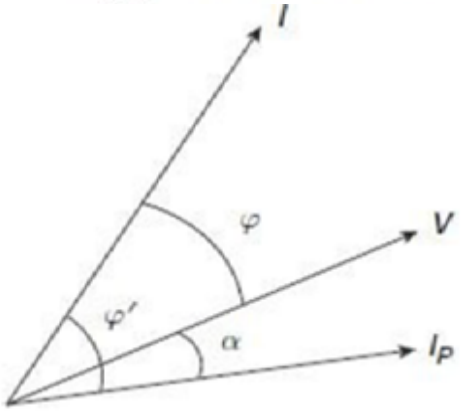


$$\text{True power indication} = \frac{\cos\varphi}{\cos\alpha \cdot \cos(\varphi+\alpha)} \text{ X Actual wattmeter reading}$$

From phasor diagrams, it is clear that the wattmeter will read high when the load power factor is lagging, as in that case the effect of pressure coil inductance is to reduce the phase angle between load current and pressure coil current.

The wattmeter will read low when the load power factor is leading, as in that case the effect of pressure coil inductance is to increase the phase angle between load current and pressure coil current.

Wattmeter is compensated for errors caused by inductance of pressure coil by means of a capacitor connected in parallel with a portion of multiplier (series resistance).

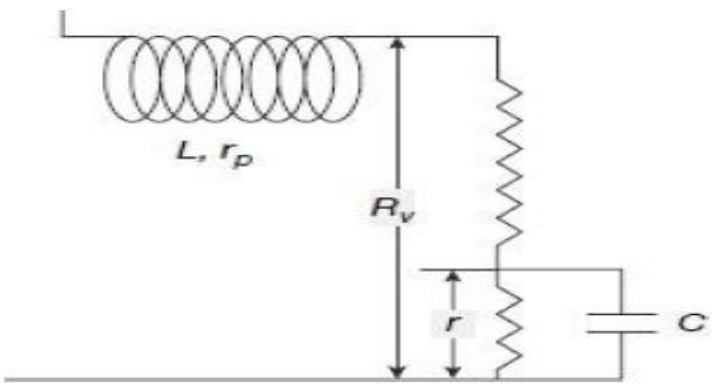

The total impedance of the circuit , $Z_P = (r_p + R_V - r) + j\omega L + \dfrac{r - j\omega C r^2}{1 + \omega^2 C^2 r^2}$

If $w^2 C^2 r^2 << 1$ ,

$$Z_P = (r_p + R_V - r) + jwL + r - jwCr^2 = r_P + R_V + jw(L - Cr^2)$$

If by proper design, we can make $L = Cr^2$

Then, impedance = $r_p + R_V = R_P$

Thus error introduced due pressure coil inductance can be substantially eliminated.

**2. Pressure Coil Capacitance**

- The pressure coil circuit may have capacitance in addition to inductance. This capacitance is mainly due to the interturn capacitance of the winding and series resistance. The effect of capacitance is opposite to that due to inductance. Therefore, the wattmeter will read high for leading power factor and low for lagging power factor.
- Inductive reactance is normally greater than capacitive reactance. The effect of capacitance and inductance varies with variable frequency of the supply.
- Actual reading of the wattmeter needs to be corrected by correction factors to obtain the true reading.

**3. Mutual Inductance Effects**

- Errors may occur due to mutual inductance between current and pressure coils of wattmeter. These errors are quite low at power frequencies, but increase with increase in frequency.
- The effect of mutual inductance is to increase phase angle for connection in which pressure coil is connected on load side and to decrease phase angle when current coil is connected on load side.
- The effect of mutual inductance can be avoided by arranging the coil system in such a way that they have no mutual inductance. The Drysdale Torsion-head wattmeter is an example for such type.

**4. Error due to Connection**

There are two alternate methods of connecting a wattmeter in a circuit.

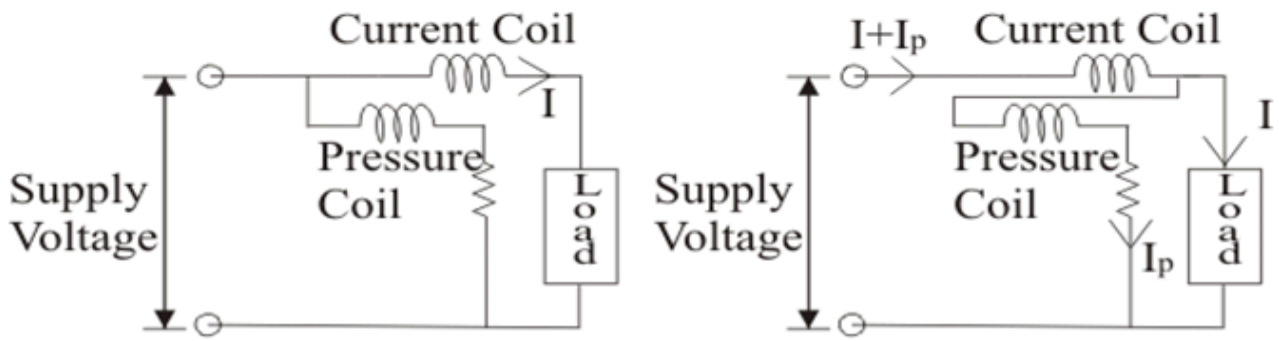

In first connection, pressure coil is connected on supply side. Voltage applied to pressure coil is voltage across load plus voltage drop across current coil. Power indicated by wattmeter= power consumed by load + power loss in current coil = power consumed by load + $I^2R_c$

In second connection, current coil is on supply side. It carries pressure coil current plus load current. Power indicated by wattmeter= power consumed by load + power loss in pressure coil = power consumed by load + $V^2/R_p$

- If load current is small, the voltage drop in current coil is small, so first connection introduces a very small error.
- If load current is large, pressure coil current is small as compared to load current and hence power loss in pressure coil will be very small. Therefore, second connection is preferable.
- In wattmeter designed for low power factor measurements, a compensating coil may be used to compensate for the error caused by power loss in pressure coil circuit.

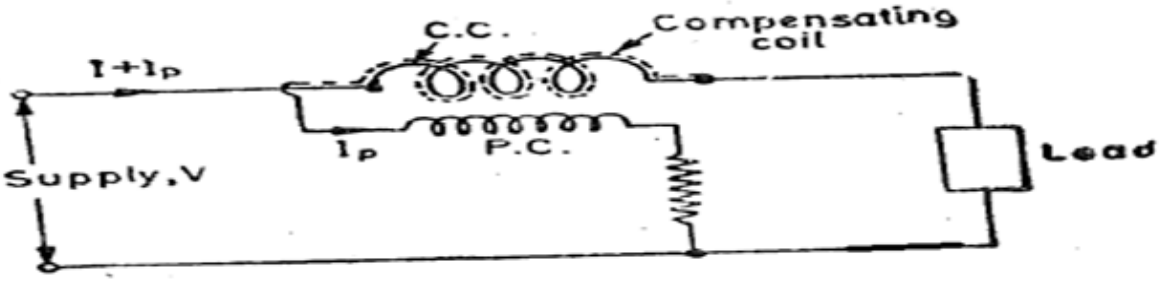


The compensating coil is made as nearly as possible identical and coincident with the current coil. It is so connected that it opposes the field of current coil. It is connected in series with pressure coil circuit and so it carries a current $I_p$ and produces a field corresponding to this current. This field acts in opposition to current coil field. Thus, the resultant field is due to current I only. Hence, error is neutralized.

**5. Eddy Current Errors**

- Eddy currents are induced in solid metal parts and within the thickness of conductors by alternating magnetic field produced by current coil. These currents produce their own magnetic field, alter magnitude and phase of current coil field, and cause errors.
- Any metal that is used is kept away and is selected to have high resistivity to reduce eddy currents induced in it.
- Stranded conductors are recommended for the current coil to restrict generation of eddy current within the thickness of the conductor.

**6. Stray Magnetic Field Errors**

- The electrodynamometer type wattmeter has a weak operating field and therefore it is affected by stray magnetic fields resulting in serious errors. Hence, these instruments should be shielded against stray magnetic fields.
- Laminated iron shields are used in portable laboratory instruments while steel cases are sometimes provided to shield the switchboard instruments.

**7. Errors caused by Vibration of Moving System**

- The torque on the moving system varies with a frequency, which is twice that of voltage. If the parts of the moving system have a natural frequency, which is in resonance with the frequency of torque pulsation, the moving system would vibrate with considerable amplitude. These vibrations will cause errors.
- This error can be reduced by designing the moving elements to have natural frequencies much further away from twice the frequency of the supply voltage.

**8. Temperature Errors**

- The change in room temperature may affect the indication of wattmeter. This is because any change in temperature will change the resistance of pressure coil and stiffness of springs, which provide controlling torque. These effects are opposite in nature and cancel each other if the pressure coil circuit were composed of copper and of a resistance alloy having a negligible resistance temperature coefficient in the ratio of 1:10.

## LOW POWER FACTOR WATTMETERS

Measurement of power in circuits having low power factor by ordinary electrodynamometer wattmeter is difficult and inaccurate because:

- The deflecting torque on the moving system is small (owing to low power factor) even when the current and pressure coils are fully excited.
- Errors introduced because of inductance of pressure coil tend to be large at low power factors.

Special features incorporated in an electrodynamometer wattmeter to make it a low power factor type of wattmeter are:

- Pressure coil current – Pressure coil circuit is designed to have a low resistance value, so that current flowing through it is increased to give an increased operating torque. Pressure coil current in low power factor wattmeter may be 10 times the value employed for high power factor wattmeter.
- Compensation for Pressure coil current – The power measured in low power factor circuit is small and current is high because of low power factor, first connection cannot be used because owing to large load current there would be large power loss in current coil and therefore wattmeter will give large error.

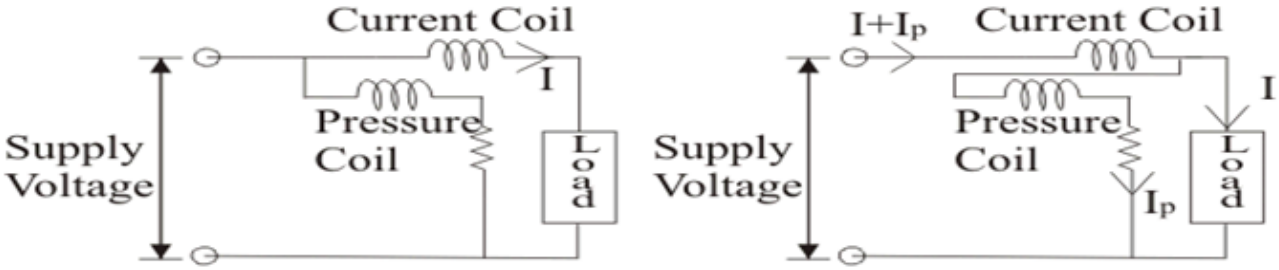


- If second connection is used, power loss in pressure coil circuit is included in wattmeter reading resulting in serious error, as power loss in pressure coil may be a large percentage of power being measured.

- Therefore, compensation for pressure coil current in low power factor wattmeter is done by using a compensating coil.

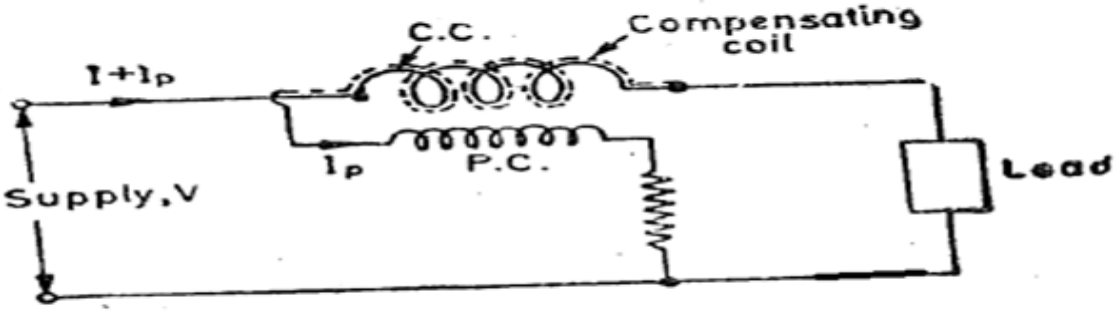


The compensating coil is made as nearly as possible identical and coincident with the current coil. It is so connected that it opposes the field of current coil. It is connected in series with pressure coil circuit and so it carries a current $I_p$ and produces a field corresponding to this current. This field acts in opposition to current coil field. Thus, the resultant field is due to current I only. Hence, error is neutralized.

- Compensation for Inductance of Pressure coil – Error caused by pressure coil inductance is: VI sinϕ tanα. With low power factor, value of ϕ is large and hence error is large. Hence, in low power factor wattmeter we must compensate for the error caused by inductance of the pressure coil. This is done by connecting a capacitor across a part of series resistance in pressure coil circuit.

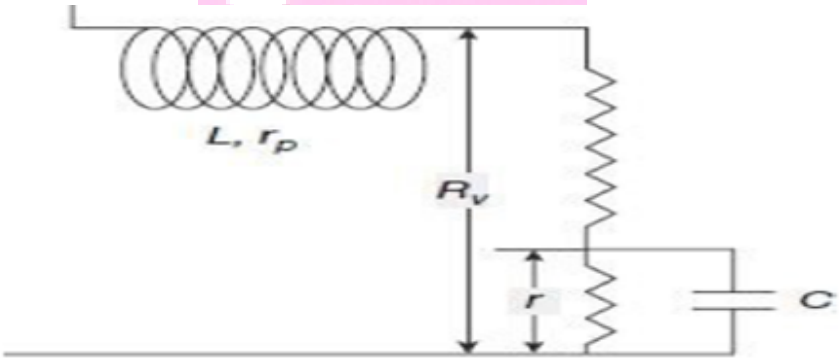


- Small control torque - Low power factor wattmeter are designed to have small control torque so that they give full-scale deflection for power factors as low as 0.1.

Incorporating the features, the low power factor wattmeter can be represented as:

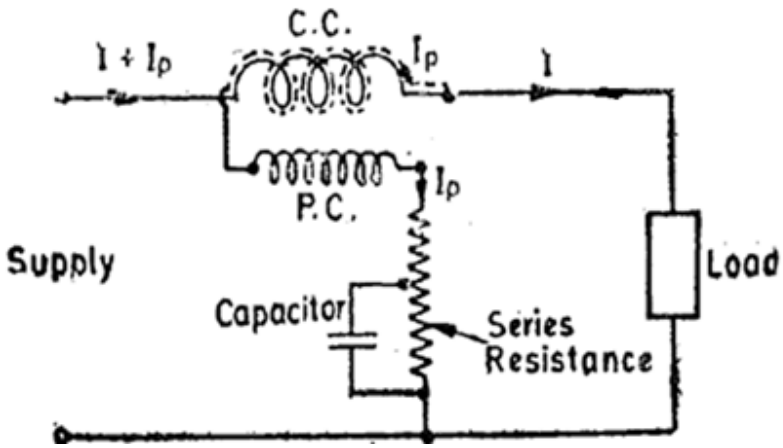

# 3-PHASE POWER MEASUREMENT

## Blondel's Theorem

The theorem states that 'in an n-phase network, the total power can be obtained by taking summation of the n wattmeters so connected that current elements of the wattmeters are each in one of the n lines and the corresponding voltage element is connected between that line and a common point'.

If the common point is located on one of the lines, then the power may be measured by n-1 wattmeters.

Consider the case of measuring power using three wattmeters in a 3-phase, 3-wire system.

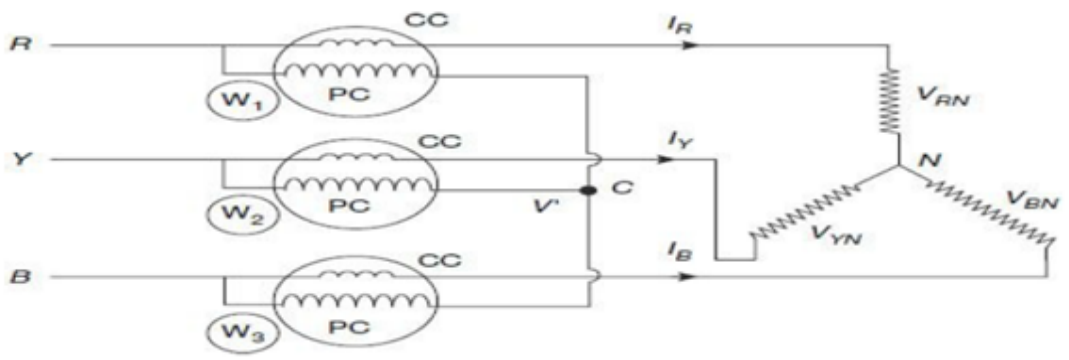


Current coils of 3 wattmeters (W1, W2, W3) are connected to 3 lines (R, Y, B). Potential coils are connected to common point C. Potential at point C may be different from neutral point (N) potential of load.

Power consumed by the load $P = V_{RN} \times I_R + V_{YN} \times I_Y + V_{BN} \times I_B$

Reading of wattmeter $W_1$, $P_1 = V_{RC}$ X $I_R$

Reading of wattmeter $W_2$, $P_2 = V_{YC}$ X $I_Y$

Reading of wattmeter $W_3$, $P_3 = V_{BC}$ X $I_B$

if the voltage difference between the nodes $C$ and $N$ is taken as $V_{CN} = V_C - V_N$

$$V_{RN} = V_R - V_N = V_R - V_C + V_C - V_N = V_{RC} + V_{CN}$$

$$V_{YN} = V_Y - V_N = V_Y - V_C + V_C - V_N = V_{YC} + V_{CN}$$

$$V_{BN} = V_B - V_N = V_B - V_C + V_C - V_N = V_{BC} + V_{CN}$$

Sum of the three wattmeter readings can now be combined as

$$P_1 + P_2 + P_3 = (V_{RN} - V_{CN}) \text{ X } I_R + (V_{YN} - V_{CN}) \text{ X } I_Y + (V_{BN} - V_{CN}) \text{ X } I_B$$

$$= V_{RN} \text{ X } I_R + V_{YN} \text{ X } I_Y + V_{BN} \text{ X } I_B - V_{CN} (I_R + I_Y + I_B)$$

Applying Kirchhoff's current law at node $N$, $(I_R + I_Y + I_B) = 0$

Thus, sum of wattmeter readings,

$$P_1 + P_2 + P_3 = V_{RN} \times I_R + V_{YN} \times I_Y + V_{BN} \times I_B$$

Sum of three wattmeter readings indicate total power consumed by load.

## Three-Wattmeter Method

For power measurement in 3-phase 4-wire system,

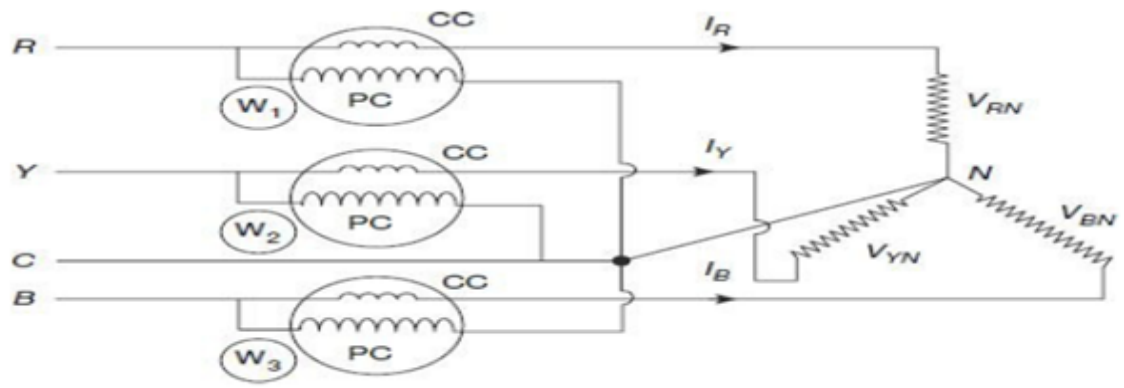


Common point of three pressure coils coincides with neutral N. Voltage across each potential coil is thus, effectively the per-phase voltages of corresponding phases.

$$P_1 + P_2 + P_3 = V_{RN} \times I_R + V_{YN} \times I_Y + V_{BN} \times I_B$$

Sum of three wattmeter readings indicate total power consumed by load.

## Two-Wattmeter Method

- Most common method of measuring three-phase power.
- Particularly useful when the load is unbalanced.
- If the common point of pressure coils coincide with one of the lines, then the power may be measured by n-1 = two wattmeters.
- The two wattmeters may have Star (Wye) or Delta connection.

## Star(Wye) connection

- Current coils of wattmeters are connected in lines R and B. Voltage coils are connected between lines R & Y and B & Y respectively.

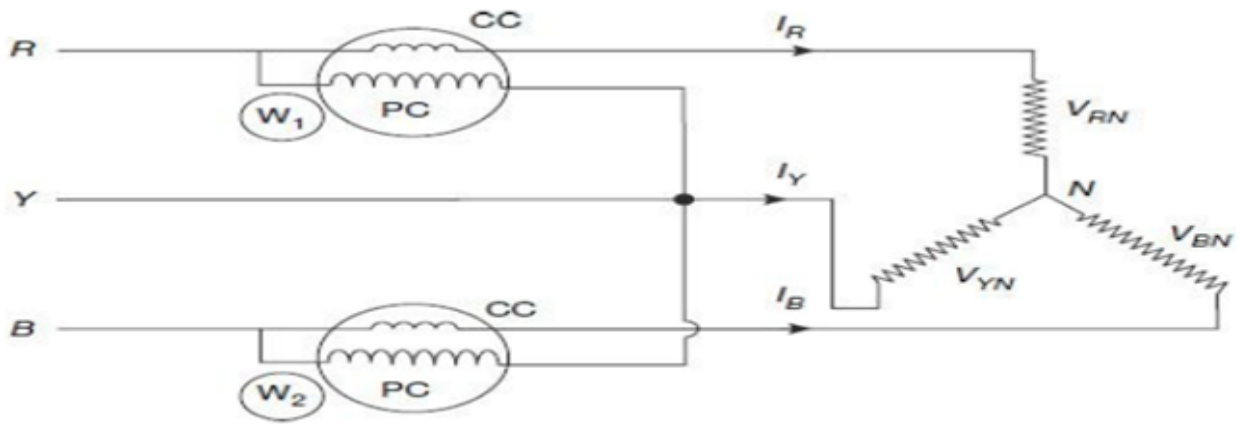

Power consumed by the load $P = V_{RN} \times I_R + V_{YN} \times I_Y + V_{BN} \times I_B$

Reading of wattmeter $W_1$, $P_1 = V_{RY} \text{ X } I_R = (V_{RN} - V_{YN}) \text{ X } I_R$

Reading of wattmeter $W_2$, $P_2 = V_{BY} \text{ X } I_B = (V_{BN} - V_{YN}) \text{ X } I_B$

Summation of the two wattmeter readings:

$P_1 + P_2 = (V_{RN} - V_{YN}) \text{ X } I_R + (V_{BN} - V_{YN}) \text{ X } I_B = V_{RN} \times I_R + V_{BN} \times I_B - V_{YN} \times (I_R + I_B)$

From Kirchhoff's law, summation of currents at node $N$ must be zero, i.e.,

$$I_R + I_Y + I_B = 0$$

or $$I_R + I_B = -I_Y$$

$$P_1 + P_2 = V_{RN} \times I_R + V_{YN} \times I_Y + V_{BN} \times I_B$$

Sum of two wattmeter readings indicate total power consumed by load.

**Delta connection**

Current coils of wattmeters are connected in lines R and B. Voltage coils are connected between lines R & Y and B & Y respectively.

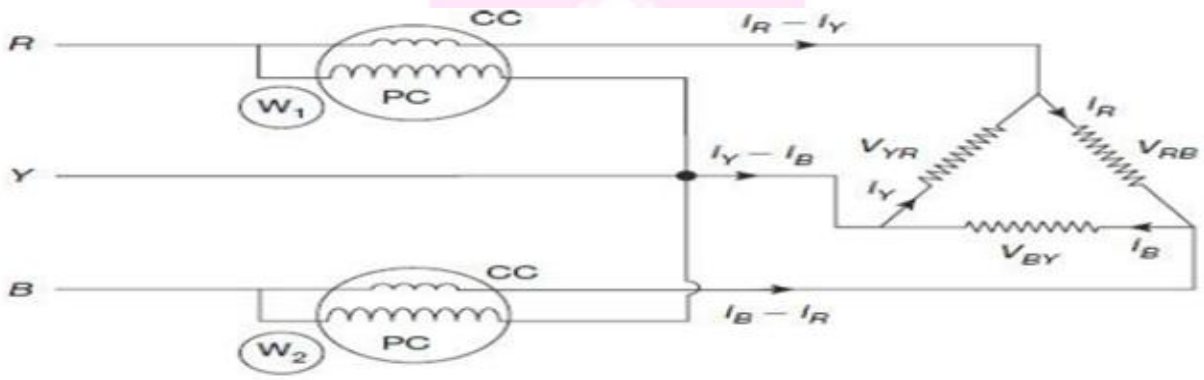


Power consumed by the load $P = V_{RB} \times i_R + V_{YR} \times i_Y + V_{BY} \times i_B$

Reading of wattmeter $W_1$, $P_1 = -V_{YR} \text{ X } (i_R - i_Y)$

Reading of wattmeter $W_2$, $P_2 = V_{BY} \text{ X } (i_B - i_R)$

Summation of the two-wattmeter readings:

$P_1 + P_2 = -V_{YR} \text{ X } (i_R - i_Y) + V_{BY} \text{ X } (i_B - i_R) = V_{YR} \times i_Y + V_{BY} \times i_B - i_R \times (V_{YR} + V_{BY})$

From Kirchhoff's voltage law, summation of voltage drops across a closed loop is zero,

$$V_{YR} + V_{BY} + V_{RB} = 0$$

or $$V_{YR} + V_{BY} = -V_{RB}$$

$$P_1 + P_2 = V_{YR} \times i_Y + V_{BY} \times i_B + V_{RB} \times i_R$$

Sum of two wattmeter readings indicate total power consumed by load.

## THREE PHASE WATTMETERS

A dynamometer type three-phase wattmeter consists of two separate wattmeter movements mounted together in one case with the two moving coils mounted on the same spindle.

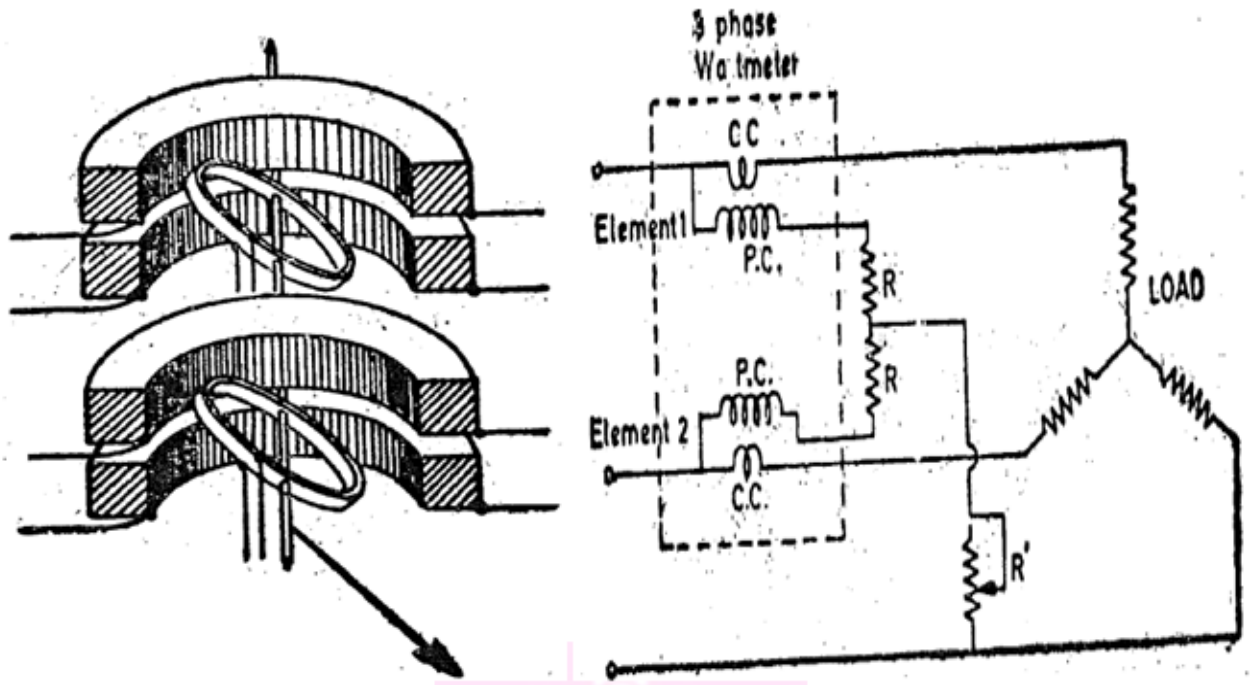


- There are two current coils and two pressure coils.
- A current coil together with its pressure coil is known as an element. Hence, a three-phase wattmeter has two elements.
- Connections of two elements of a 3-phase wattmeter are same as that for two-wattmeter method using two single-phase wattmeters.
- Torque on each element is proportional to power being measured by it. Total torque deflecting the moving system is the sum of deflecting torque of the two elements.
- Deflecting torque of element1 $\alpha$ $P_1$;

  Deflecting torque of element2 $\alpha$ P2.

  Hence, total deflecting torque $\alpha$ $(P_1 + P_2)$ $\alpha$ P.
- Hence, total deflecting torque on moving system is proportional to total power.
- Three-phase wattmeter reads correctly, when there is no mutual interference between the two elements.
- A laminated iron shield may be placed between the two elements to eliminate mutual effects.
- Compensation for mutual effects can be done by using Weston's method where resistance R' may be adjusted to compensate for errors caused by mutual interference.

## HALL EFFECT MULTIPLIERS

- In applications where power is to be controlled or processed further, Hall effect multipliers are used. It uses Hall effect element.
- The current is passed through the current coil, which produces a magnetic field proportional to current, i. This field is perpendicular to Hall effect element.
- A current $i_p$, proportional to voltage is passed through Hall effect element in a direction perpendicular to field. Current is limited by multiplier resistance $R_s$.

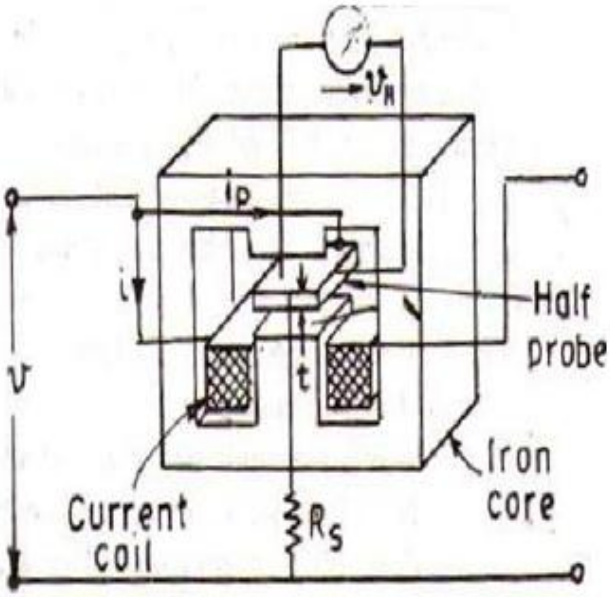


- Output voltage of Hall effect multiplier is : $v_H = K_H\, i_p\, .B/t$

  where $K_H$ = Hall co-efficient; V-m/A-Wbm$^{-2}$,

  B = flux density; Wb/m$^2$ and t = thickness of Hall element; m.
- Now B α i and $i_p$= (v/ $R_s$) α v. Hence $v_H$ α vi. Output voltage of Hall effect multiplier is proportional to instantaneous power.
- Hence, voltmeter connected at output terminals can be calibrated in terms of power.
- Hall effect voltage, which is representative of power, can be processed further for control and other purposes. This is a major advantage of Hall effect multiplier over electrodynamometer wattmeter where output is deflection of pointer, which cannot be processed further.

## INSTRUMENT TRANSFORMERS

Transformers used in conjunction with measuring instruments for measurement purposes.

- Current transformer (CT) - for measurement of current.
- Voltage / Potential transformer (PT) – for measurement of voltage.

**Use:**

- For extension of instrument range.

In power systems, voltages and currents handled are too large to be measured by any device of reasonable size and cost. So direct measurement is not possible. Voltages and currents are stepped down using instrument transformers for metering with instruments of moderate sizes.

- In CT, primary winding carries current being measured and secondary winding is connected to an ammeter. CT steps down current to level of ammeter.
- In PT, primary winding is connected to voltage being measured and secondary winding to voltmeter. PT steps down voltage.

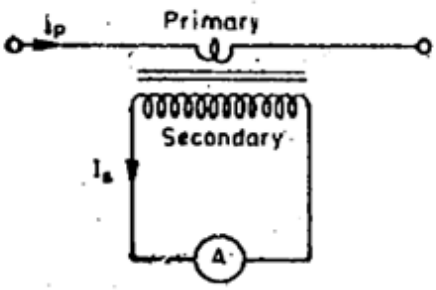


Current transformer.

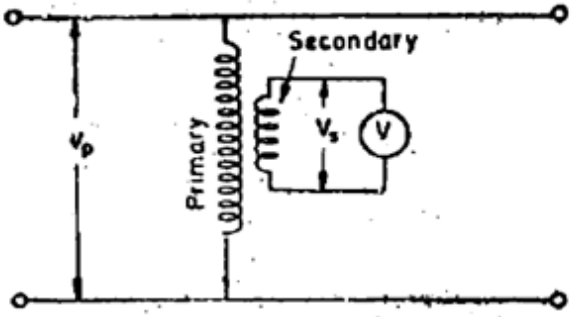


Potential transformer.

- In DC measurements, for extension of instrument range, shunts and multipliers are used which are suitable for small current and voltage measurements respectively.

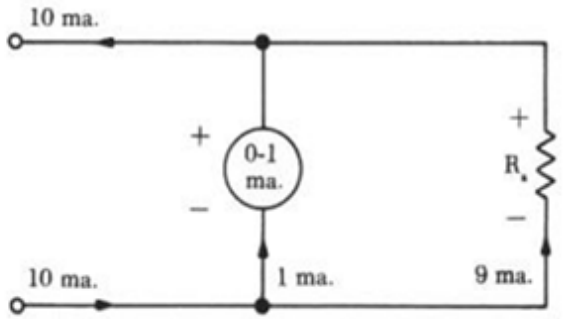


Divert the extra current from meter by using a Shunt.

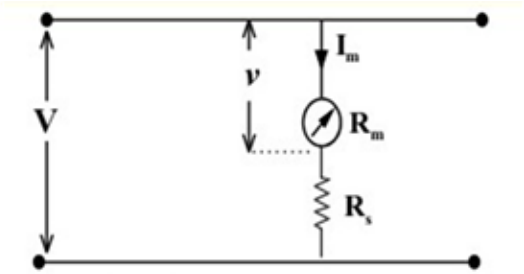


Divert the extra voltage from meter by using a multiplier.

## DISADVANTAGES OF SHUNTS

- Difficult to achieve accuracy on ac since division of current depends on ratio of reactance to resistance of two paths.
- In order to make the division of current same for all frequencies, time constants of meter and shunt should be same. So a separate shunt would be needed for each instrument.
- Power consumed by shunts at large currents would be considerably large.
- The insulation of instrument and shunt is quite difficult if measurements are done at high voltages.
- The measuring circuit is not electrically isolated from the power circuit.

## DISADVANTAGES OF MULTIPLIERS

- The power consumed by multipliers becomes large as voltage increases.
- Leakage currents should be kept down to a negligible value. Special types of constructions are needed and hence the construction for high voltage is costly and complicated.
- The measuring circuit is not electrically isolated from the power circuit.

## ADVANTAGES OF INSTRUMENT TRANSFORMERS

- Meter readings when they are used in conjunction with instrument transformers, do not depend on their constants R, L, C.
- Current transformers are standardized at 5A secondary winding current and voltage transformers from 100 to 120V, which are moderate ratings. Hence, instruments of moderate size are used for metering.
- With the standardization of CT and PT at secondary winding ratings, cost of instruments is reduced and replacement of transformers is easy.
- The measuring circuit is isolated from power circuit.
- Low power consumption in metering circuit.
- Several instruments can be operated from a single instrument transformer.

## RATIOS OF INSTRUMENT TRANSFORMERS

Transformation ratio $R = \frac{|\text{primary phasor}|}{|\text{secondary phasor}|}$

$= \frac{\text{primary current}}{\text{secondary current}}$ for a C.T.

$= \frac{\text{primary voltage}}{\text{secondary voltage}}$ for a P.T.

Nominal ratio $K_n = \frac{\text{rated primary current}}{\text{rated secondary current}}$ for a C.T.

$= \frac{\text{rated primary voltage}}{\text{rated secondary voltage}}$ for a P.T.

Turns Ratio $n = \frac{\text{number of turns of secondary winding}}{\text{number of turns of primary winding}}$ for a C.T.

$= \frac{\text{number of turns of primary winding}}{\text{number of turns of secondary winding}}$ for a P.T.

## RATIO CORRECTION FACTOR (RCF)

- RCF of a transformer is the transformation ratio divided by nominal ratio
- The ratio marked on the transformer is nominal ratio
- Transformation ratio = RCF x nominal ratio
- $R = RCF \times Kn$

## BURDEN OF INSTRUMENT TRANSFORMER

- It is convenient to express load across the secondary winding terminals as the output in volt-ampere at the rated secondary winding voltage.

Total secondary burden

$$= \frac{(\text{secondary induced voltage})^2}{(\text{impedance of secondary circuit including impedance of secondary winding})}$$

$$= (\text{secondary current})^2 \times (\text{impedance of secondary circuit including secondary winding})$$

Secondary burden due to load $= \frac{(\text{secondary terminal voltage})^2}{(\text{impedance of load on secondary winding})}$

$$= (\text{secondary current})^2 \times (\text{impedance of load on secondary winding})$$

## CURRENT TRANSFORMER

- Primary winding is connected in series with line carrying the current to be measured.
- Primary current is dependent upon load connected to the system and is not determined by load (burden) connected on secondary winding of CT.

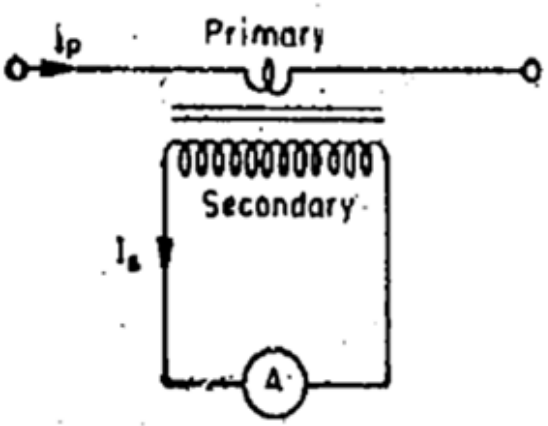


Current transformer.

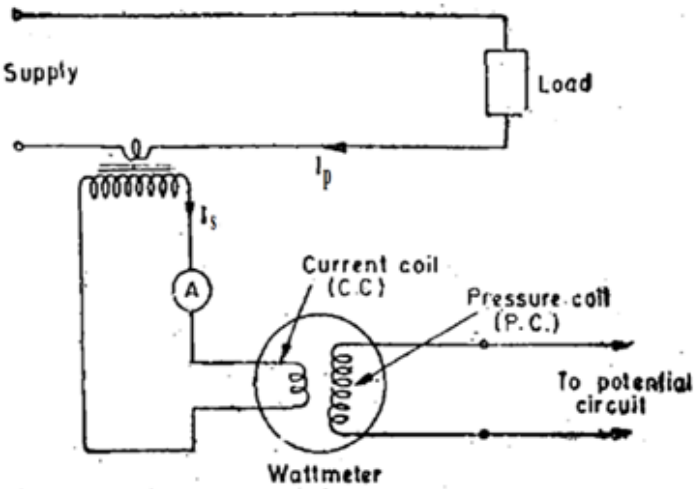


Fig. Use of C.T. for current and power measurement

- The primary winding consists of very few turns and therefore no appreciable voltage drop across it.
- The secondary winding has larger number of turns, determined by turns ratio.
- The ammeter or wattmeter current coil is connected directly across secondary winding terminals. Thus, CT operates its secondary winding nearly under short circuit conditions.
- One of the terminals of the secondary winding is earthed to protect equipment and personnel in the vicinity in the event of insulation breakdown in CT.

## EQUIVALENT CIRCUIT OF A CURRENT TRANSFORMER

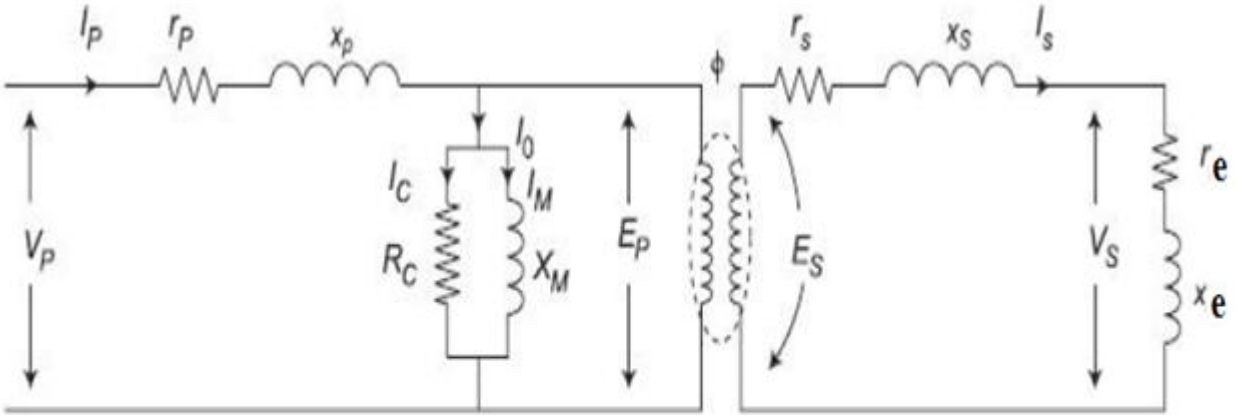


$\mathbf{V_s = E_s - I_s r_s - j\, I_s x_s}$

$\mathbf{I_p = nI_s + I_o}$

$\mathbf{I_o = I_M + I_c}$

$n$ = turns ratio = $N_S / N_P$

$r_p$ = resistance of primary winding

$x_p$ = reactance of primary winding

$r_s$ = resistance of secondary winding

$x_s$ = reactance of secondary winding

$r_e$ = resistance of external burden

$x_e$ = reactance of external burden

$V_p$ = primary supply voltage, $E_p$ = primary induced voltage

$V_s$ = voltage at secondary winding terminals

$E_s$ = secondary induced voltage

$N_p$ = number of primary winding turns

$N_s$ = number of secondary winding turns

$I_s$ = secondary winding current, $I_p$ = primary winding current

$\phi$ = working flux of the transformer

$\theta$ = phase angle of the transformer

$\delta$ = angle between secondary winding induced voltage and secondary winding current

= phase angle of total burden including impedance of secondary winding

$$= \tan^{-1}\left(\frac{x_s + x_e}{r_s + r_e}\right)$$

$\Delta$ or $\beta$ = phase angle of secondary winding load circuit, i.e., of external burden

$$= \tan^{-1}\left(\frac{x_e}{r_e}\right)$$

$I_0$ = exciting current (no - load current)

$I_M$ = magnetising component of exciting current

$I_C$ = core loss component of exciting current

$R_C$ = imaginary resistance representing core losses

$X_M$ = magnetising reactance

$\alpha$ = angle between exciting current $I_0$ and working flux $\phi$

**PHASOR DIAGRAM OF A CT**

- The flux $\varphi$ is plot along the positive x-axis.
- Magnetising component of current $I_M$ is in phase with the flux.
- The core loss component of current $I_c$ leads by $I_M$ 90°.
- Summation of $I_c$ and $I_M$ produces the no-load current $I_0$, which is $\alpha$ angle ahead of flux $\varphi$.

- The primary winding induced voltage $E_P$ is in the same phase with the resistive core loss component of the current $I_c$. As per transformer principles, the secondary winding induced voltage $E_S$ will be 180° out of phase with primary winding induced voltage $E_P$.
- Secondary current $I_S$ lags secondary induced voltage $E_S$ by angle **δ.**

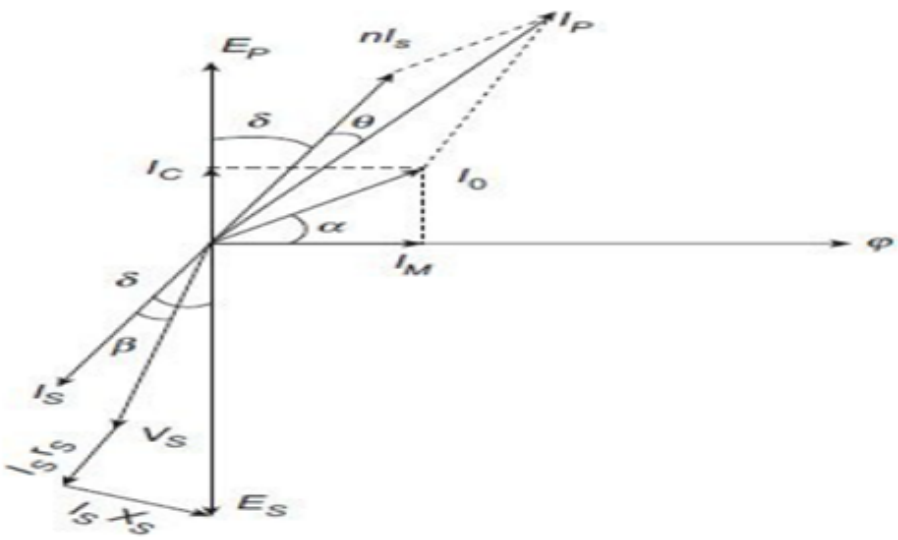


- Secondary output terminal voltage $V_S$ is obtained by vectorically subtracting secondary winding resistive and reactive voltage drops $I_S r_S$ and $I_S x_S$ respectively from secondary induced voltage $E_S$.
- Phase angle difference between secondary current $I_S$ and secondary terminal voltage $V_S$ is β, which is phase angle of load.
- Secondary current $I_S$, when reflected back to primary, is represented by 180° shifted phasor, $nI_S$, where n is turns ratio.
- The primary winding current $I_P$ is phasor summation of reflected secondary current (load component) $nI_S$ and no-load current $I_0$.
- The phase angle difference θ between the primary current $I_P$ and the reflected secondary current $nI_S$ is called phase angle of the CT.

## RELATIONSHIPS IN A CT

Consider a small section of the phasor diagram.

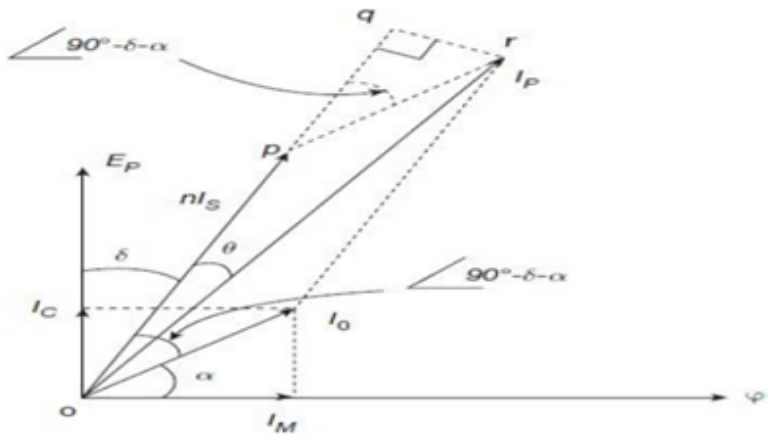

## TRANSFORMATION RATIO

From the right-angle triangle $pqr$, we get

$$pr = I_0$$

$$pq = I_0 \cdot \cos(90_\circ - \delta - \alpha) = I_0 \cdot \sin(\delta + \alpha)$$

$$qr = I_0 \cdot \sin(90_\circ - \delta - \alpha) = I_0 \cdot \cos(\delta + \alpha)$$

Now, $(or)^2 = (op + pq)^2 + (qr)^2$

Or, $(Ip)^2 = (nI_S + I_0 \cdot \sin(\delta + \alpha))^2 + (I_0 \cdot \cos(\delta + \alpha))^2$

$$= n^2 I_S^2 + I_0^2 \cdot \sin^2(\delta + \alpha) + 2nI_S I_0 \cdot \sin(\delta + \alpha) + I_0^2 \cdot \cos^2(\delta + \alpha)$$

$$= n^2 I_S^2 + 2nI_S I_0 \cdot \sin(\delta + \alpha) + I_0^2 (\sin^2(\delta + a) + \cos^2(\delta + \alpha))$$

$$= n^2 I_S^2 + 2nI_S I_0 \cdot \sin(\delta + a) + I_0^2$$

$$\therefore \quad I_P = \sqrt{n^2 I_S^2 + 2nI_S I_0 \cdot \sin(\delta + \alpha) + I_0^2}$$

Since $I_0 << nI_s$, we can approximate as

$$I_P = \sqrt{n^2 I_S^2 + 2nI_S I_0 \cdot \sin(\delta + \alpha) + (I_0 \cdot \sin(\delta + \alpha))^2}$$

$$I_P = nI_S + I_0 \cdot \sin(\delta + \alpha)$$

Transformation ratio, $R = I_p/I_s$

$$R = \frac{nI_s + I_0 \sin(\delta + \alpha)}{I_s} = n + \frac{I_0}{I_s}\sin(\delta + \alpha)$$

$$R = n + \frac{I_0}{I_S}\sin(\delta + \alpha) = n + \frac{I_0}{I_S}(\sin\delta\cos\alpha + \cos\delta\sin\alpha)$$

since, $I_M = I_0 \cos\alpha$ and $I_C = I_0 \sin\alpha$

$$R = n + \frac{I_m}{I_s}\sin\delta + \frac{I_c}{I_s}\cos\delta$$

$$R = n + \frac{I_m \sin\delta + I_c \cos\delta}{I_s}$$

## PHASE ANGLE

Angle by which secondary current phasor when reversed, $nI_S$, differs in phase from primary current $I_P$, is called phase angle ($\theta$) of CT.

This angle is taken as positive when the reversed secondary current leads the primary current and taken as negative when the reversed secondary current lags the primary current.

$$\tan\theta = \frac{qr}{oq} = \frac{qr}{po+qp} = \frac{I_0 \cdot \sin[90^\circ - (\delta+\alpha)]}{nI_S + I_0 \cdot \cos[90^\circ - (\delta+\alpha)]}$$
$$= \frac{I_0 \cdot \cos(\delta+\alpha)}{nI_S + I_0 \cdot \sin(\delta+\alpha)}$$

For very small angles, $\theta \approx \dfrac{I_0 \cdot \cos(\delta+\alpha)}{nI_S + I_0 \cdot \sin(\delta+\alpha)}$

Since, $I_0 << nI_S$,

$$\theta = \frac{I_0\cos(\delta+\alpha)}{nI_s} = \frac{I_0[\cos\delta\cos\alpha - \sin\delta\sin\alpha]}{nI_s}$$

$$\therefore \quad \theta = \frac{I_m\cos\delta - I_c\sin\delta}{nI_s} \text{ radians}$$

Converting to degrees,

$$\theta = \frac{180^\circ}{\pi}\left[\frac{I_m\cos\delta - I_c\sin\delta}{nI_s}\right] \text{ degrees}$$

## RATIO ERROR

- Value of transformation ratio is not equal to turns ratio.
- Value is not constant, but depends on $I_m$, $I_C$, secondary winding load current and its power factor.

The ratio error is defined as,

$$\%\text{ Ratio error} = \frac{\text{Nominal ratio} - \text{Actual Ratio}}{\text{Actual ratio}} \times 100$$

$$\%\text{ Ratio error} = \frac{K_n - R}{R} \times 100$$

- In practice, the CT burden is largely resistive with a small value of inductance, thus the secondary phase angle δ is positive and generally small.
- Thus, sin δ ≈ 0 and cos δ ≈ 1.

$$R \approx n + \frac{I_M \sin\delta + I_C \cos\delta}{I_S} \approx n + \frac{I_C}{I_S}$$

- Since $I_p = nI_s$, $R = n + nI_c/I_p = n(1 + I_c/I_p)$

## PHASE ANGLE ERROR

- In power measurements, the phase of secondary winding current shall be displaced by exactly $180^0$ from that of primary winding current. But phase difference is $\theta$

Error in phase angle is given as

$$\theta \sim \frac{180}{\pi}\left(\frac{I_M\cos\delta - I_C\sin\delta}{nI_S}\right)$$

- In practice, the CT burden is largely resistive with a small value of inductance, thus the secondary phase angle δ is positive and generally small.
- Thus, sin δ ≈ 0 and cos δ ≈ 1, $\theta = \frac{180}{\pi}\frac{I_M}{nI_s}$
- Since $I_p = nI_s$, $\theta = \frac{180}{\pi}\frac{I_M}{I_P}$

## POTENTIAL TRANSFORMER

- In PT, primary winding is connected across the line carrying the voltage to be measured and secondary winding to the voltmeter.
- PT steps down the voltage.

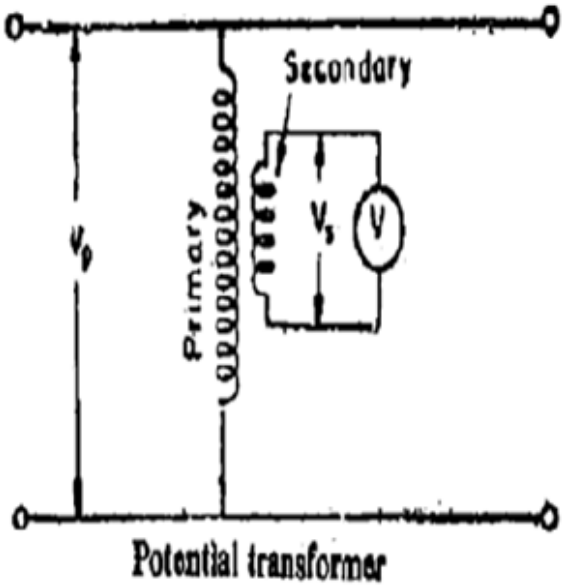


(a)

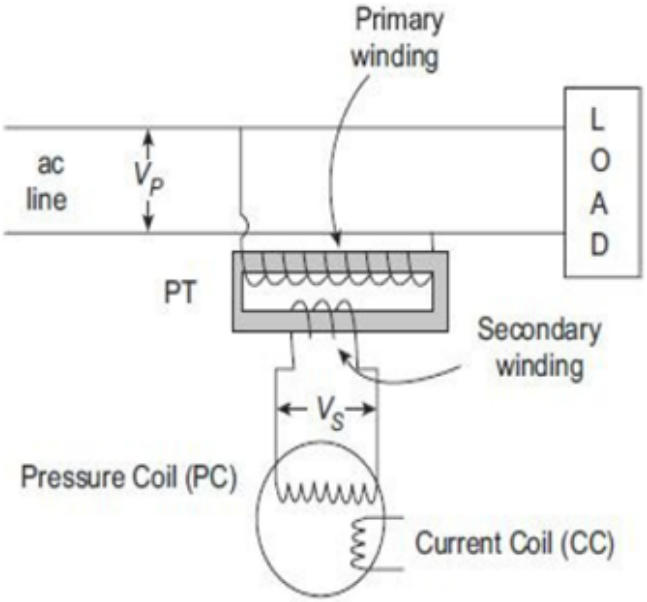


(b)

*Use of PT for (a) voltage, and (b) power measurement*

## DIFFERENCES BETWEEN CT AND PT

| CT | PT |
|---|---|
| Reduce the main power line current to be measured by normal range instruments, i.e. current is stepped down from primary to secondary | Reduce the main power line voltage to be measured by normal range instruments, i.e. voltage is stepped down from primary to secondary |
| Primary winding of CT is connected in series with the main power line to sense current | Primary winding of PT is connected across (in parallel with) the main power line to sense voltage |
| Primary winding has less number of turns as compared to the secondary winding | Primary winding has more number of turns as compared to the secondary winding |
| CT secondary side should never be open circuited while energised, to restrict accidental over-voltage | PT secondary can be safely open circuited even if the PT is energized, since secondary voltage is always restricted by the turns ratio |
| In many cases, such as in bar type, in single primary winding type and in clamp-on type CT, the primary winding is nothing but the main power line conductor itself | In all the PTs, separate primary as well as secondary windings are necessary. Primary winding terminals are connected across the main power line (in parallel) |
| While using CT for measurement of power, secondary winding is connected in series with the current coil of the wattmeter | While using PT for measurement of power, secondary winding is connected in parallel with the pressure coil of the wattmeter |

- PT may be considered as parallel transformer with its secondary winding operating nearly under open circuit conditions whereas CT may be thought as series transformer under virtual short circuit conditions. Thus, secondary winding of PT can be open circuited without any damage being caused to either operator or transformer.
- Primary winding current in CT is independent of secondary winding circuit conditions while primary winding current in PT certainly depends upon secondary circuit burden.
- In PT, full line voltage is impressed upon its terminals whereas CT is connected in series with one line and a small voltage exists across its terminals. However, CT carries full line current.
- Under normal operation, line voltage is nearly constant and therefore flux density and hence exciting current of PT varies only over a restricted range whereas primary winding current and excitation of CT vary over wide limits in normal operation.

## EQUIVALENT CIRCUIT OF A POTENTIAL TRANSFORMER

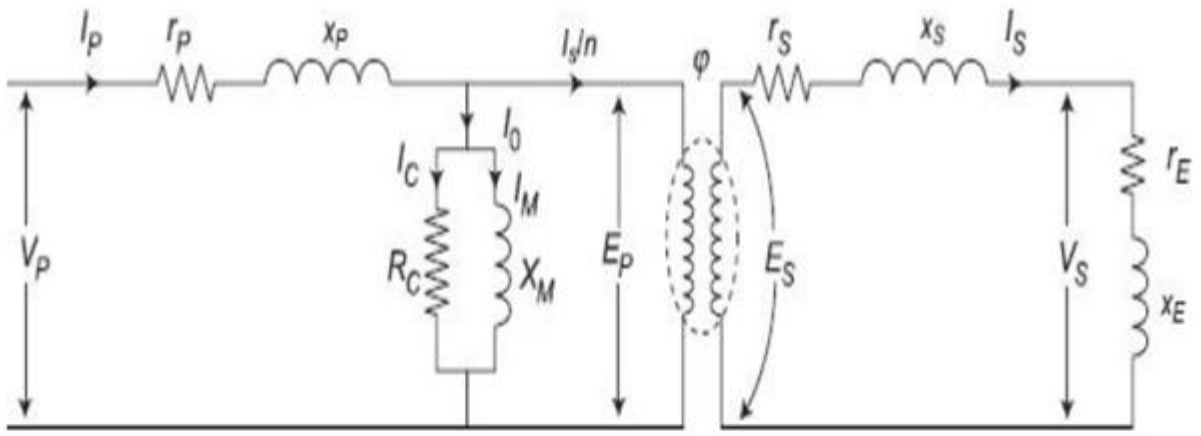


$V_P$ = primary supply voltage

$E_P$ = primary winding induced voltage

$V_S$ = secondary terminal voltage

$E_S$ = secondary winding induced voltage

$I_P$ = primary current

$I_S$ = secondary current

$I_0$ = no-load current

$I_C$ = core loss component of current

$I_M$ = magnetising component of current

$r_P$ = resistance of primary winding

$x_P$ = reactance of primary winding

$r_S$ = resistance of secondary winding

$x_S$ = reactance of secondary winding

$R_C$ = imaginary resistance representing core losses

$X_M$ = magnetising reactance

$r_E$ = resistance of external load (burden) including resistance of meters, current coils etc.

$x_E$ = reactance of external load (burden) including reactance of meters, current coils, etc.

$N_P$ = primary winding number of turns

$N_S$ = secondary winding number of turns

$n$ = turns ratio = $N_P / N_S$ = $E_P / E_S$

$\varphi$ = working flux of the PT

$\theta$ = the 'phase angle' of the PT

$\delta$ = phase angle between secondary winding terminal voltage and secondary winding current (i.e., phase angle of load circuit)

$\beta$ = phase angle between primary load current and secondary terminal voltage reversed

$\alpha$ = phase angle between no-load current $I_0$ and flux $\varphi$

**PHASOR DIAGRAM OF A PT**

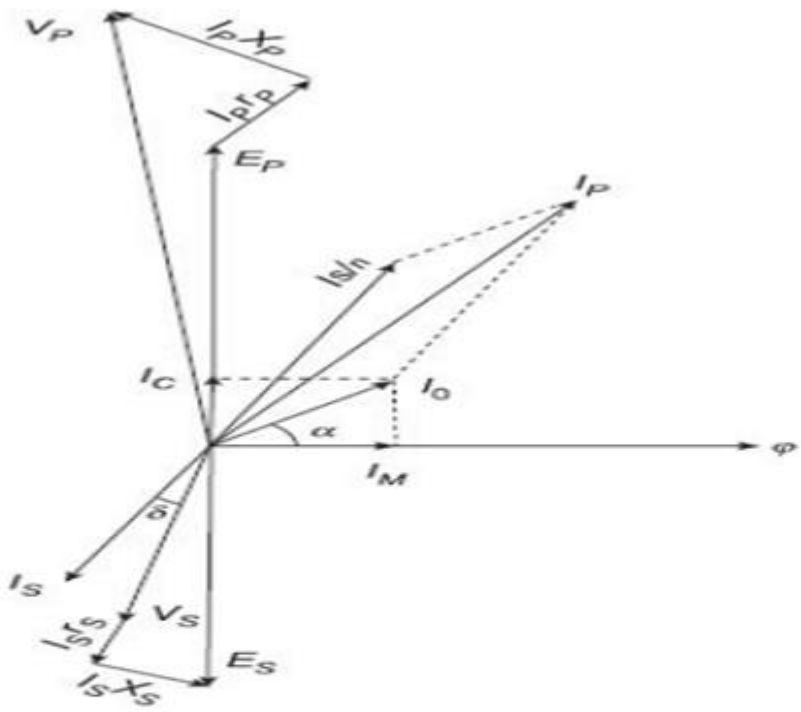


- The flux φ is plotted along the positive x-axis.
- Magnetising component of current $I_M$ is in phase with the flux.
- The core loss component of current $I_C$, leads $I_M$ by 90°.
- Summation of $I_C$ and $I_M$ produces the no-load current $I_0$.

- The primary winding induced voltage $E_P$ is in the same phase with the resistive core loss component of current $I_C$.
- As per transformer principles, the secondary winding induced voltage $E_S$ will be 180° out of phase with the primary winding induced voltage $E_P$.
- Secondary output terminal voltage $V_S$ is obtained by vectorically subtracting secondary winding resistive & reactive voltage drops $I_S r_S$ and $I_S x_S$ respectively from secondary induced voltage $E_S$.
- Secondary voltages when referred to primary side need to be multiplied by the turns ratio n, whereas, when secondary currents are to be referred to primary side, they need to be divided by n. Secondary current $I_S$, when reflected back to primary, can be represented by the 180° shifted phasor indicated by $I_S/n$.
- Primary winding current $I_P$ is the phasor summation of this reflected secondary current (load component) $I_S/n$ and the no-load current $I_0$.
- Vectorically adding the primary winding resistive and reactive voltage drops with the primary induced voltage will give the primary line voltage $V_P$.

## RELATIONSHIPS IN A PT

Consider a small section of the phasor diagram.

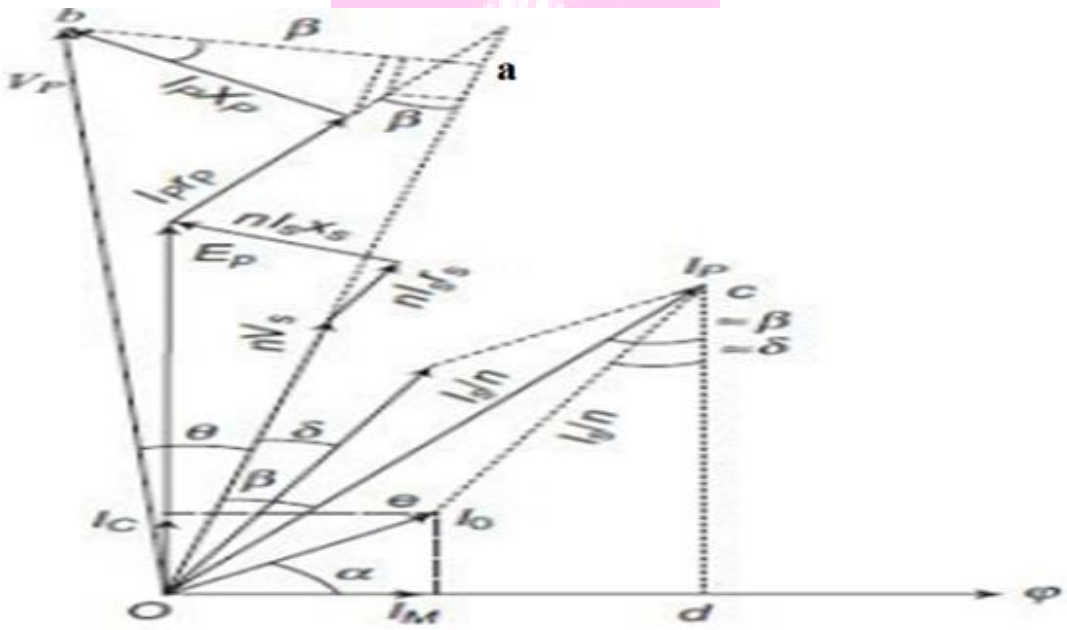


The phase-angle difference θ between the primary voltage $V_P$ and the reflected secondary voltage $nV_S$ is called phase angle of the PT.

## TRANSFORMATION RATIO

$$\overline{V_P} = \overline{E_P} + \overline{I_P r_P} + \overline{I_P x_P} = n\overline{E_S} + \overline{I_P r_P} + \overline{I_P x_P}$$

$$\overline{V_P} = n\left(\overline{V_S} + \overline{I_S r_S} + \overline{I_S x_S}\right) + \overline{I_P r_P} + \overline{I_P x_P} = n\overline{V_S} + n\overline{I_S r_S} + n\overline{I_S x_S} + \overline{I_P r_P} + \overline{I_P x_P}$$

$$oa = V_P \cos\theta$$

$$oa = nV_s + nI_s r_s \cos\delta + nI_s x_s \sin\delta + I_P r_P \cos\beta + I_P x_P \sin\beta$$

$$V_P \cos\theta = nV_S + nI_S r_S \cos\delta + nI_S x_S \sin\delta + I_P r_P \cos\beta + I_p x_P \sin\beta$$

$$V_P \cos\theta = nV_S + nI_S (r_S \cos\delta + x_S \sin\delta) + I_P r_P \cos\beta + I_p x_P \sin\beta$$

In reality, the phase angle difference $\theta$ is quite small, thus for the sake of simplicity, both $V_P$ and $V_S$ reversed can be approximated to perpendicular to the flux and hence:

$$\angle ocd \approx \beta \text{ and } \angle ecd \approx \delta$$

Thus, $I_P \cos\beta = I_C + \frac{I_S}{n}\cos\delta$ and $I_P \sin\beta = I_M + \frac{I_S}{n}\sin\delta$

In reality, once again, since $\theta$ is very small, sometimes even less than 1°, then we can approximate as

$\cos\theta = 1$, and $V_P \cos\theta = V_P$

$$V_P = nV_S + nI_S (r_S \cos\delta + x_S \sin\delta) + \left(I_C + \frac{I_S}{n}\cos\delta\right) r_P + \left(I_M + \frac{I_S}{n}\sin\delta\right) x_P$$

$$V_P = nV_S + I_S \cos\delta \left(nr_S + \frac{r_P}{n}\right) + I_S \sin\delta \left(nx_S + \frac{x_P}{n}\right) + (I_C r_P + I_M x_P)$$

$$V_P = nV_S + \frac{I_S}{n}\cos\delta (n^2 r_S + r_P) + \frac{I_S}{n}\sin\delta (n^2 x_S + x_P) + (I_C r_P + I_M x_P)$$

$$V_P = nV_S + \frac{I_S}{n}\cos\delta\, R_P + \frac{I_S}{n}\sin\delta\, X_P + (I_C r_P + I_M x_P)$$

$$V_P = nV_S + \frac{I_S}{n}(R_P \cos\delta + X_P \sin\delta) + (I_C r_P + I_M x_P)$$

Here, $R_P$ = equivalent resistance of the PT referred to primary side

$X_P$ = equivalent reactance of the PT referred to primary side

Thus, actual voltage transformation ratio:

$$R = \frac{V_P}{V_S} = n + \frac{\frac{I_S}{n}(R_P \cos\delta + X_P \sin\delta) + (I_C r_P + I_M x_P)}{V_S}$$

$$V_P = nV_S + nI_S\cos\delta\left(r_S + \frac{r_P}{n^2}\right) + nI_S\sin\delta\left(x_S + \frac{x_P}{n^2}\right) + (I_C r_P + I_M x_P)$$

$$V_P = nV_S + nI_S\cos\delta\, R_S + nI_S\sin\delta\, X_S + (I_C r_P + I_M x_P)$$

$$V_P = nV_S + nI_S(R_S\cos\delta + X_S\sin\delta) + (I_C r_P + I_M x_P)$$

$R_S$ = equivalent resistance of the PT referred to secondary side

$X_S$ = equivalent reactance of the PT referred to secondary side

Thus, actual voltage transformation ratio can again be written

$$R = \frac{V_P}{V_S} = n + \frac{nI_S(R_S\cos\delta + X_S\sin\delta) + (I_C r_P + I_M x_P)}{V_S}$$

The difference between actual transformation ratio and turns ratio can be expressed in either of the two forms:

$$R - n = \frac{\frac{I_S}{n}(R_P\cos\delta + X_P\sin\delta) + (I_C r_P + I_M x_P)}{V_S}$$

$$= \frac{nI_S(R_S\cos\delta + X_S\sin\delta) + (I_C r_P + I_M x_P)}{V_S}$$

**PHASE ANGLE**

$$\tan\theta = \frac{ab}{oa} = \frac{I_P x_P\cos\beta - I_P r_P\sin\beta + nI_S x_S\cos\delta - nI_S r_S\sin\delta}{nV_S + nI_S r_S\cos\delta + nI_S x_S\sin\delta + I_P r_P\cos\beta + I_p x_p\sin\beta}$$

To simplify the computations, here we can make the assumption that in the denominator, the terms containing $I_p$ and $I_S$ being much less compared to the large voltage $nV_S$, those terms can be neglected; thus we get a simplified form:

$$\tan\theta = \frac{I_P x_P\cos\beta - I_P r_P\sin\beta + nI_S x_S\cos\delta - nI_S r_S\sin\delta}{nV_S}$$

$$\tan\theta = \frac{x_P\left(I_C + \frac{I_S}{n}\cos\delta\right) - r_P\left(I_M + \frac{I_S}{n}\sin\delta\right) + nI_S x_S\cos\delta - nI_S r_S\sin\delta}{nV_S}$$

$$\tan\theta = \frac{I_S\cos\delta\left(\frac{x_P}{n} + nx_S\right) - I_S\sin\delta\left(\frac{r_P}{n} + nr_S\right) + I_C x_P - I_M r_P}{nV_S}$$

$$\tan\theta = \frac{\frac{I_S\cos\delta}{n}(x_P + n^2 x_S) - \frac{I_S\sin\delta}{n}(r_P + n^2 r_S) + I_C x_P - I_M r_P}{nV_S}$$

$$\tan\theta = \frac{\frac{I_S\cos\delta}{n}X_P - \frac{I_S\sin\delta}{n}R_P + I_C x_P - I_M r_P}{nV_S}$$

$$\tan\theta = \frac{\frac{I_S}{n}(X_P\cos\delta - R_P\sin\delta) + I_C x_P - I_M r_P}{nV_S}$$

Since $\theta$ is small, we can assume $\tan\theta = \theta$; thus,

$$\theta = \frac{\frac{I_S}{n}(X_P\cos\delta - R_P\sin\delta) + I_C x_P - I_M r_P}{nV_S}$$

$$\tan\theta = \frac{\frac{I_S\cos\delta}{n}(x_P + n^2 x_S) - \frac{I_S\sin\delta}{n}(r_P + n^2 r_S) + I_C x_P - I_M r_P}{nV_S}$$

$$\tan\theta = \frac{n^2\frac{I_S\cos\delta}{n}\frac{(x_P + n^2 x_S)}{n^2} - n^2\frac{I_S\sin\delta}{n}\frac{(r_P + n^2 r_S)}{n^2} + I_C x_P - I_M r_P}{nV_S}$$

$$\tan\theta = \frac{n^2\frac{I_S\cos\delta}{n}\frac{(x_P + x_S)}{n^2} - n^2\frac{I_S\sin\delta}{n}\frac{(r_P + r_S)}{n^2} + I_C x_P - I_M r_P}{nV_S}$$

$$\theta = \frac{\frac{I_S}{n}(n^2 X_S\cos\delta - n^2 R_S\sin\delta) + I_C x_P - I_M r_P}{nV_S}$$

$$\theta = \frac{nI_S(X_S\cos\delta - R_S\sin\delta) + I_C x_P - I_M r_P}{nV_S}$$

Thus, phase angle $\theta = \frac{I_S}{V_S}(X_S\cos\delta - R_S\sin\delta) + \frac{I_C x_P - I_M r_P}{nV_S}$

## RATIO (VOLTAGE) ERROR

The ratio error is defined as,

$$\%\ \text{Ratio error} = \frac{\text{Nominal ratio} - \text{Actual Ratio}}{\text{Actual ratio}} \times 100$$

$$\%\ \text{Ratio error} = \frac{K_n - R}{R} \times 100$$

- While measuring voltage, ratio error is only important while for power measurements both ratio and phase angle errors are involved.

## PHASE ANGLE ERROR

- In an ideal voltage transformer, there should not be any phase difference between primary winding voltage and the secondary winding voltage reversed. However, in an actual transformer, there exists a phase difference between $V_P$ and $V_S$ reversed.

$$\text{phase angle } \theta = \frac{\frac{I_S}{n}(X_P\cos\delta - R_P\sin\delta) + I_C x_P - I_M r_P}{nV_S}$$

$$= \frac{I_S}{V_S}(X_S\cos\delta - R_S\sin\delta) + \frac{I_C x_P - I_M r_P}{nV_S}$$

- The phase angle is taken as positive when secondary winding voltage reversed leads the primary winding voltage. The angle is negative when secondary winding voltage reversed lags the primary winding voltage.

## MEASUREMENT OF ENERGY

- Energy is total power consumed over a time interval.
- Energy = Power × Time.
- Instrument should take into account the time interval during which power is supplied.
- Unit of energy is Joule or Watt-second or Watt-hour. Commonly used is kilowatt-hour (kWh), defined as the energy consumed when power is delivered at an average rate of 1 kW for one hour. In commercial metering, 1kWh is specified as 1 unit of energy.
- Energy meters have moving systems that revolve continuously. Speed of revolution is proportional to power consumed. Total number of revolutions made by moving system over a given interval of time is proportional to the energy consumed.

## SINGLE PHASE INDUCTION TYPE ENERGY METER

Theory

- In all induction instruments, we have two alternating fluxes created by currents flowing in the windings of the instrument.
- These fluxes are made to link with a metal disc or drum and produce emfs in the metal disc or drum provided.
- These emfs in turn, circulate eddy currents in metal disc or drum.
- Interaction of these fluxes and eddy currents produce torques that make disc or drum to rotate.

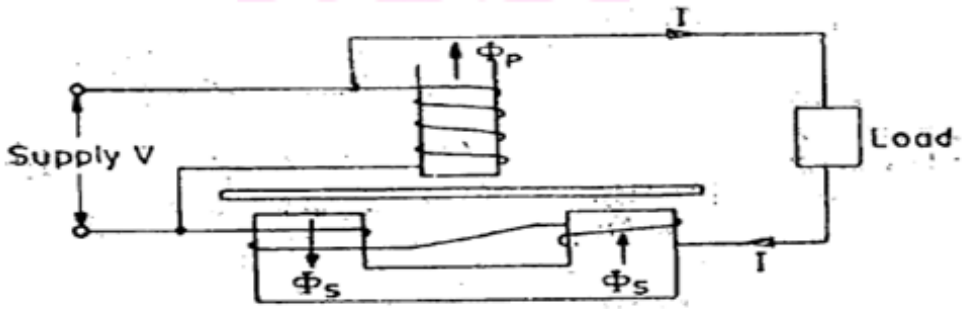


Construction

A single-phase energy meter has four essential parts: (i) Driving/Operating system (ii) Moving system (iii) Braking system (iv) Registering system

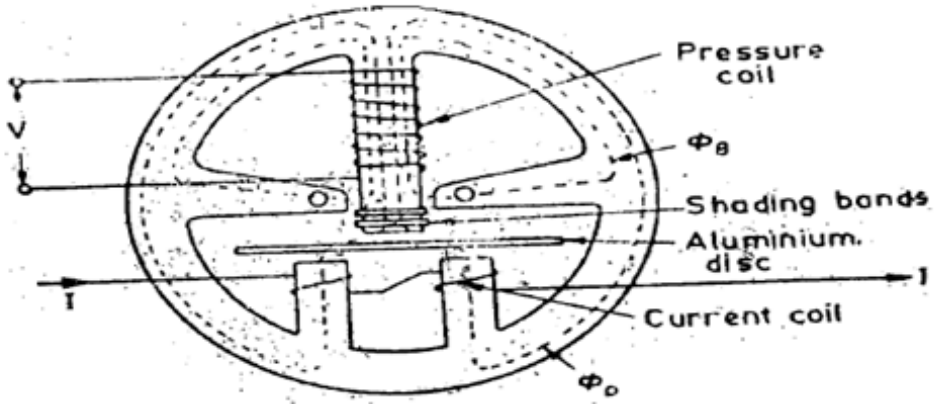

Driving/Operating System

- The operating system consists of two electromagnets. The cores of these electromagnets are made of silicon steel laminations.
- Coil of one of the electromagnets (series magnet) is connected in series with load and excited by load current, is called current coil.
- The other electromagnet (shunt magnet) is wound with a coil connected across the supply, called pressure coil. The pressure coil carries a current proportional to supply voltage.
- Copper shading bands are provided on central limb of shunt magnet. Position of bands is adjustable. They are used to bring flux produced by shunt magnet exactly in quadrature with applied voltage.

Moving System

- This consists of a light aluminium disc mounted on a light alloy shaft or spindle. The disc is placed in the air gap between the series and shunt magnets.
- The disc is so positioned that it intersects the flux produced by both the magnets. The deflecting torque on the disc is produced by interaction between these fluxes and the eddy current they induce in the disc.
- The spindle is supported by a steel pivot supported by jewel bearings at the two ends.
- A unique design for suspension of the rotating disc is used in 'floating-shaft' energy meters. Here, the rotating shaft has one small piece of permanent magnet at each end. The upper magnet is attracted by a magnet placed in the upper bearing, whereas the lower magnet is attracted by another magnet placed in the lower bearing. The moving system thus floats without touching either of the bearing surfaces. Thus, friction is drastically reduced.

Braking System

- Permanent magnet positioned near edge of aluminium disc forms the braking system.
- Emf induced in aluminium disc due to relative motion between rotating disc and fixed permanent magnet (brake magnet) induces eddy current in the disc. This eddy current, while interacting with brake magnet flux, produces a retarding or braking torque, which is proportional to speed of rotating disc. When braking torque becomes equal to operating torque, disc rotates at a steady speed.
- Position of permanent magnet is adjustable. Hence, braking torque can be adjusted by shifting magnet to different radial positions.
- Series magnet also acts as braking magnet, since it opposes the main torque producing flux generated by the shunt magnet.

Registering System

- The function of a registering or counting system is to continuously record a numerical value that is proportional to the number of revolutions made by the rotating system.

- By suitable combination of a train of reduction gears, rotation of aluminium disc can be transmitted to different pointers to register meter readings on different dials marked with ten equal divisions.
- Finally, the kWh reading can be obtained by multiplying the number of revolutions as pointed out by the dials with the meter constant (Meter constant is defined as number of revolutions made per kWh. Its value is marked on meter enclosure.)
- Pointer type and Cyclometer registers can be used.

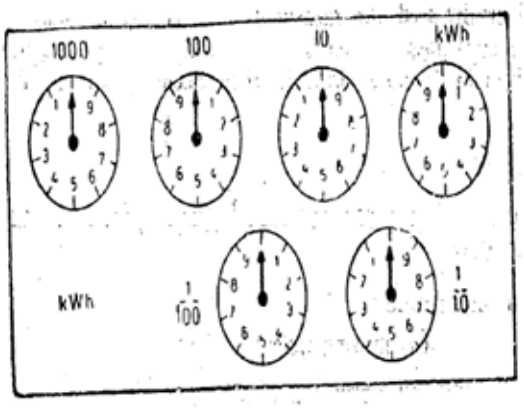


Pointer type of register.

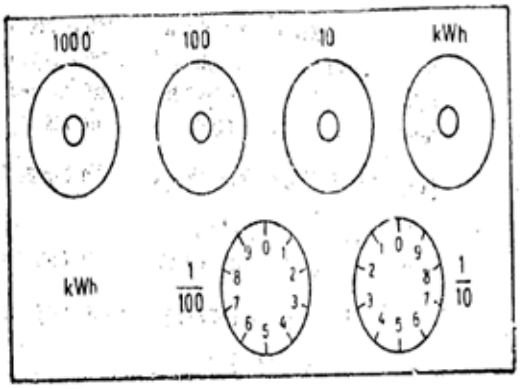


Cyclometer register.

## POLYPHASE ENERGY METERS

- Energy in polyphase circuits can be measured by a group of single-phase energy meters connected as required by **Blondel's Theorem**.
- Total energy is the sum of readings of all energy meters.
- However, in commercial measurement, polyphase energy meters are used.
- Energy in n conductor system requires (n-1) measuring elements for measurement of total energy. Thus 3- phase, 3-wire system requires 2- element energy meter.
- All elements are mounted on same spindle or shaft, which drives the registering mechanism.
- Thus registering mechanism registers net effect of all elements.

## TWO ELEMENT THREE PHASE ENERGY METERS

- Two discs are mounted on same spindle.
- It is essential that for the same energy, the driving torque should be equal in the two elements.
- An adjustable magnetic shunt is provided on one or both elements to balance the torques of two.
- Two current coils are connected in series opposition and two pressure coils are connected in parallel. Full load current is allowed to pass through current coil. Hence, two torques are in opposition and so, if torques are equal, then disc should not move.
- If there is any slight motion indicating inequality of two torques, then adjustable magnetic shunt is provided which is adjusted to a position where two torques are equal and opposite and disc stalls.

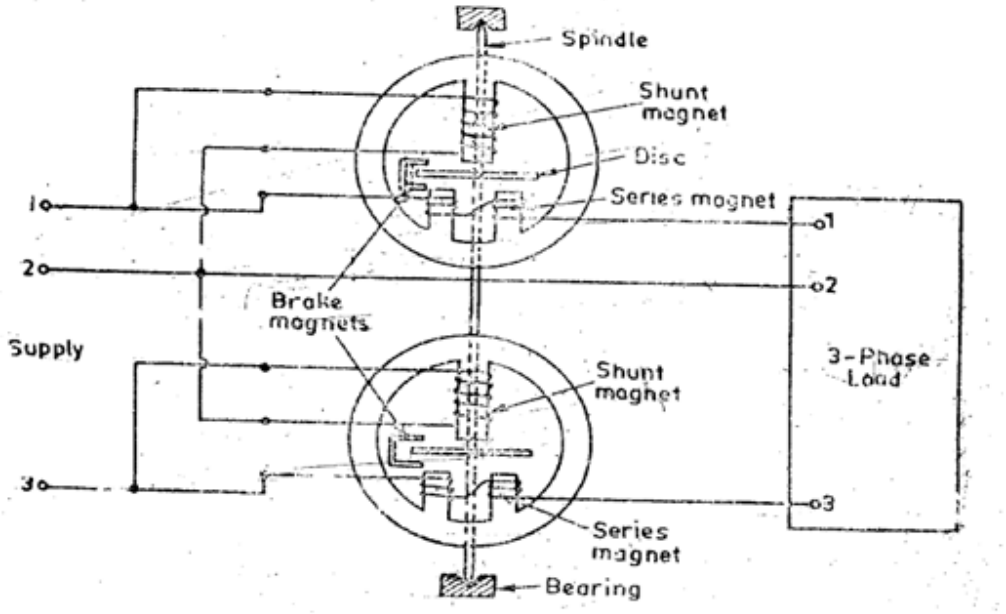


## DIGITAL ENERGY METERS

- Power is directly measured by high-end processor.
- Digital signal processor or high performance microprocessors are used in digital electric meters.
- Voltage and current transducers are connected to high resolution ADC.
- Voltage and current samples are multiplied and integrated by digital circuits to measure the energy consumed.
- It is then converted to frequency or pulse rate.
- Microprocessor also calculates phase angle between voltage and current, so that it also measures and indicates reactive power.

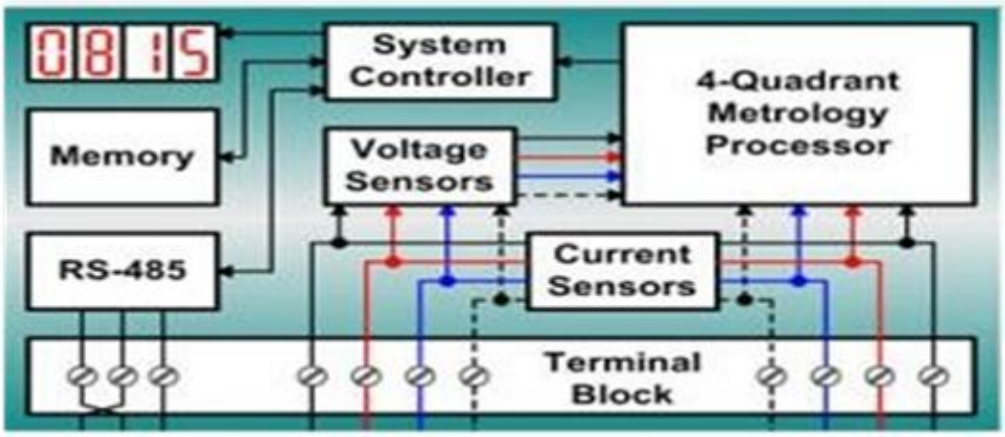


- It is programmed in such a way that it calculates energy according to tariff and other parameters like power factor, maximum demand, etc and stores all these values in a non-volatile memory EEPROM.
- It contains real time clock (RTC) for calculating time for power integration, maximum demand calculations and also date and time stamps for particular parameters.
- Battery is provided for RTC and other significant peripherals for backup power.

## TIME OF DAY (TOD) METERING

- It is also known as Time of Usage (TOU) metering.
- It involves dividing the day, month and year into tariff slots and with higher rates at peak load periods and low tariff rates at off-peak load periods.
- A Time of Day Energy meter or a Time of Usage Energy meter is an Energy meter, which measures the energy consumed, and also the time of day it was consumed.
- The time of day energy meter, is used in many countries where the consumer is charged based on the time of the day, the power was consumed.
- The Time of Day Energy meter gives it output in the form of slabs with energy units and time.
- The utility then applies the cost per unit depending on the time and the customer gets final bill.
- The Time of day helps encourage customers to use power during the off-peak hours.

## SMART METERING

- Smart meter is an electronic device that records information such as consumption of electric energy, voltage levels, current and power factor. Smart meters typically record energy near real-time, and report regularly at short intervals throughout the day.
- Smart meters communicate information to consumer for greater clarity of consumption behaviour, and electricity suppliers for system monitoring and customer billing. Since smart meters can be read remotely, labour costs are reduced.
- Smart meters enable two-way communication between meter and central system. Communications may be wireless, or via fixed wired connections such as power line carrier (PLC). Wireless communication options include cellular communications, Wi-Fi, low power long-range wireless (LoRa), ZigBee etc.

# MODULE – 3
# MEASUREMENT OF CIRCUIT PARAMETERS USING BRIDGES, HIGH VOLTAGE AND HIGH CURRENT MEASUREMENTS

3.1 Classification of resistance, Low resistance - Ammeter voltmeter method, Kelvin's double bridge, Medium resistance - Ammeter voltmeter method, Wheatstone's bridge, High resistance - loss of charge method, measurement of earth resistance.

3.2 Measurement of self-inductance - Maxwell's Inductance Bridge, Measurement of capacitance - Schering's bridge, Measurement of frequency - Wien's bridge.

3.3 Calibration of Ammeter, Voltmeter and Wattmeter using DC potentiometers.

3.4 High voltage and high current in DC measurements - voltmeters, Sphere gaps, DC Hall effect sensors.

## CLASSIFICATION OF RESISTANCE

**Low Resistances** - All resistances of the order less than 1 Ω may be classified as low resistances found in copper winding in armatures, ammeter shunts, contacts, switches, etc.

**Medium Resistances** - Resistances in the range 1 Ω to 100 kΩ may be classified as medium resistances. Most of the electrical apparatus, electronic circuits, carbon resistance and metal film resistors are found to have resistance values lying in this range.

**High Resistances** - Resistances higher than 100 kΩ are classified as high resistances. Insulation resistances in electrical equipment are expected to have resistances above this range.

## MEASUREMENT OF MEDIUM RESISTANCE

Different methods for measurement of medium range resistances are

(i) Ohmmeter method

(ii) Ammeter–voltmeter method

(iii) Substitution method

(iv) Wheatstone bridge method

## AMMETER- VOLTMETER METHOD

- The voltmeter–ammeter method is a direct application of ohm's law in which the unknown resistance is estimated by measurement of current (I) flowing through it and the voltage drop (V) across it. Then measured value of the resistance is

$$R_m = \frac{\text{Voltmeter reading}}{\text{Ammeter reading}} = \frac{V}{I}$$

- This method is very simple and popular since the instruments required for measurement are usually easily available in the laboratory.

- Two types of connections are employed for voltmeter–ammeter method

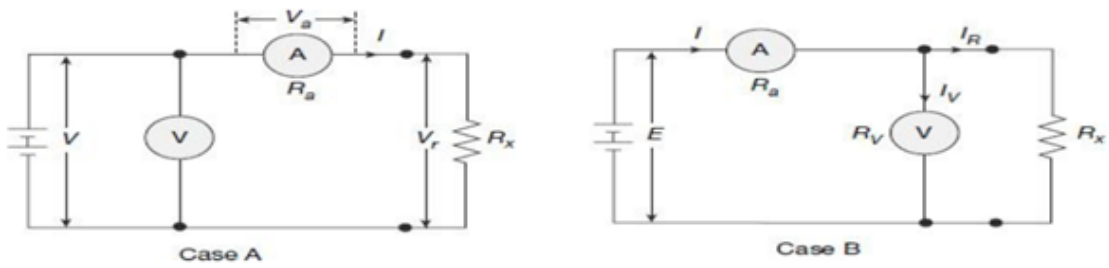


Rx = true value of unknown resistance

Rm = measured value of unknown resistance

Ra = internal resistance of ammeter

$R_V$ = internal resistance of voltmeter

- Rm would be equal to Rx, if Ra is zero and $R_V$ is infinite.
- Since it is not possible, both methods give inaccurate results.

**Case A**

- In this circuit, ammeter is connected directly with unknown resistance, but voltmeter is connected across series combination of ammeter and resistance Rx.
- Ammeter measures true value of current through resistance but voltmeter does not measure true value of voltage across resistance. Voltmeter measures the sum of voltage drops across ammeter and unknown resistance Rx.

Let, voltmeter reading = V, ammeter reading = I, then measured value of resistance,

$$R_m = \frac{\text{Voltmeter reading}}{\text{Ammeter reading}} = \frac{V}{I}$$

$$V = Va + Vr$$

$$V = I \times Ra + I \times Rx = I \times (Ra + Rx)$$

$$\frac{V}{I} = Rm = Ra + Rx$$

- Measured value Rm of unknown resistance is higher than true value Rx, by quantity Ra, internal resistance of ammeter. True value is equal to measured value, if ammeter resistance is zero.
- Error,

$$\varepsilon = \frac{R_m - R_x}{R_x} = \frac{R_a}{R_x}$$

- If Rx is much higher compared to Ra, then circuit in Case A gives negligible error. It is used for high resistance measurement.

**Case B**

- In this circuit, voltmeter is connected directly across unknown resistance, but ammeter is connected in series with the parallel combination of voltmeter and resistance Rx.
- Voltmeter measures true value of voltage drop across resistance but ammeter does not measure true value of current through resistance. Ammeter measures the summation of current flowing through voltmeter and unknown resistance Rx.
- Let, voltmeter reading = V, ammeter reading = I
- Thus, $V = I_R \times R_X = I_V \times R_V$

  $I = I_V + I_R$
- Measured value of resistance

$$= R_m = \frac{V}{I} = \frac{V}{I_V + I_R} = \frac{V}{\frac{V}{R_V} + \frac{V}{R_x}} = \frac{R_V R_x}{R_V + R_x} = \frac{R_x}{1 + \frac{R_x}{R_V}}$$

- Measured value Rm of unknown resistance is thus lower than true value Rx by a quantity related to internal resistance of voltmeter.
- True value is equal to measured value only if voltmeter resistance is infinite. If voltmeter resistance is much higher than resistance under measurement, then connection in Case B can be used with negligible error.

Circuit in case B is used for measurement of low resistance values.

## WHEATSTONE BRIDGE

- Most commonly used for measurement of medium resistances.
- It consists of four resistance arms, together with a battery (voltage source) and a galvanometer (null detector).
- R3 and R4 are two fixed known resistances, R2 is a known variable resistance and $R_X$ is unknown resistance to be measured.

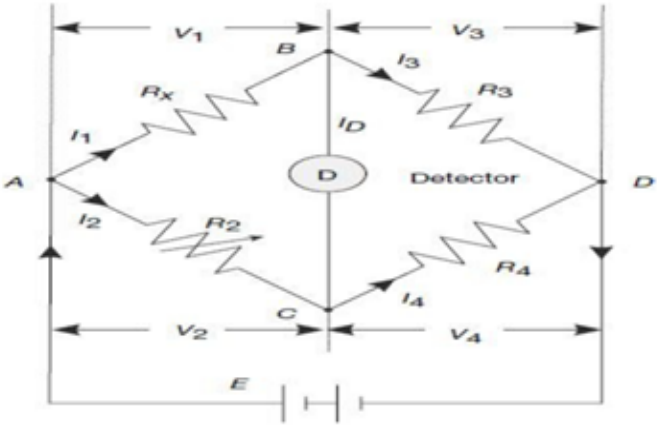


- Under operating conditions, current $I_D$ through galvanometer will depend on difference in potential between nodes B and C.

- Bridge balance is achieved by varying R2 and checking whether galvanometer pointer is resting at zero position. At balance, no current flows through galvanometer, which means potentials at B and C, are equal. At balance following conditions are satisfied:

1. Detector current is zero, i.e., $I_D = 0$ and thus I1 = I3 and I2 = I4

2. Potentials at node B and C are same, i.e., $V_B = V_C$ .Thus voltage drop in arm AB equals voltage drop across arm AC, i.e., $V_{AB} = V_{AC}$ and voltage drop in arm BD equals voltage drop across arm CD, i.e., $V_{BD} = V_{CD}$

$V_{AB} = V_{AC}$

$I1 \times Rx = I2 \times R2$

At balance, galvanometer carries no current and acts as open circuit.

$$I_1 = I_3 = \frac{E}{R_X + R_3} \text{ and } I_2 = I_4 = \frac{E}{R_2 + R_4}$$

$$\frac{E}{R_X + R_3} \times R_X = \frac{E}{R_2 + R_4} \times R_2$$

$$\frac{R_X + R_3}{R_X} = \frac{R_2 + R_4}{R_2}$$

$$\frac{R_X + R_3}{R_X} - 1 = \frac{R_2 + R_4}{R_2} - 1$$

$$\frac{R_X + R_3 - R_X}{R_X} = \frac{R_2 + R_4 - R_2}{R_2}$$

$$\frac{R_3}{R_X} = \frac{R_4}{R_2}$$

$$\frac{R_X}{R_2} = \frac{R_3}{R_4}$$

$$R_X = R_2 \times \frac{R_3}{R_4}$$

- Measurement of unknown resistance is made in terms of three known resistances.
- Arms BD and CD containing fixed resistances R3 and R4 are called ratio arms.
- Arm AC containing known variable resistance R2 is called standard arm.
- Range of resistance value that can be measured by bridge can be increased simply by increasing the ratio R3/R4.

## ERRORS IN WHEATSTONE BRIDGE

1. Discrepancies between true and marked values of resistances of the three known arms can introduce errors in measurement.

2. Inaccuracy of the balance point due to insufficient sensitivity of the galvanometer may result in false null points.

3. Bridge resistances may change due to self-heating ($I^2R$) resulting in error in measurement calculations.

4. Thermal emfs generated in bridge circuit or in the galvanometer in the connection points may lead to error in measurement.

5. Errors may occur due to resistances of leads and contacts. It is negligible unless unknown resistance is of very low value.

6. There may be personal errors in finding proper null point, taking readings, or during calculations.

- Errors due to inaccuracies in values of standard resistors and insufficient sensitivity of galvanometer can be eliminated by using good quality resistors and galvanometer.
- Temperature dependent change of resistance due to self-heating can be minimised by measuring within as short time as possible.
- Thermal emfs in bridge arms may cause serious trouble while measuring low resistances. Thermal emf in galvanometer circuit may be serious in some cases, so care must be taken to minimise those effects for precision measurements. Some sensitive galvanometers employ all-copper systems (i.e., copper coils as well as copper suspensions), so that there is no junction of dissimilar metals to produce thermal emf.

## MEASUREMENT OF LOW RESISTANCE

- Method used for measurement of medium resistances are not suitable for low resistance measurement since resistances of leads and contacts, though small, are appreciable in comparison to low resistances under measurement. For example, a contact resistance of 0.001 Ω causes a negligible error when medium resistance of 100 Ω is being measured, but same contact resistance would cause error of 10% while measuring low resistance of 0.01 Ω.
- Hence, special type of construction and techniques need to be used for low resistance measurement to avoid errors due to leads and contacts.
- Methods used are (i) voltmeter–ammeter method, (ii) Kelvin's double-bridge method, and (iii) potentiometer method.

## VOLTMETER–AMMETER METHOD

- It is similar to method used for medium resistance measurement.
- It is commonly used for measurement of low resistances when accuracy of the order of 1% is sufficient.
- Special construction is used with four terminals for resistance.
- One pair of terminals CC', called current terminals, is used to lead current to and from resistor. Voltage drop across resistor is measured between other pair of terminals PP', called potential terminals.

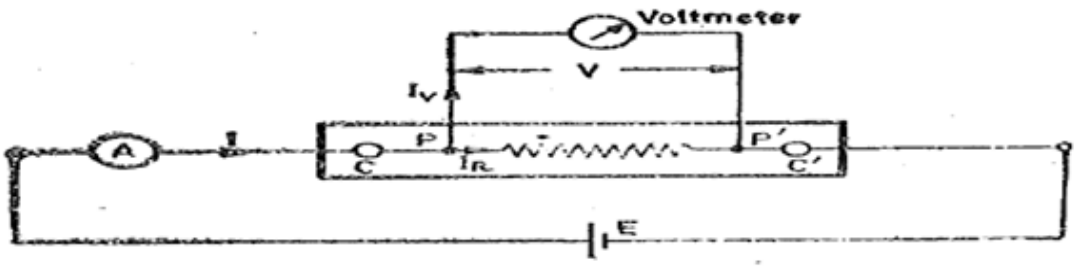

- Voltage indicated by voltmeter is voltage drop of resistor across potential terminals PP' and does not include any contact resistance drop that may be present at current terminals CC'.
- Contact drop at potential terminals PP' are less, since current passing through these contacts are extremely small owing to high resistance involved in potential circuit due to high resistance voltmeter.
- Value of the unknown resistance $R_X$

$$= \frac{\text{Voltmeter reading}}{\text{Ammeter reading}}$$

- Precise measurement in this method requires voltmeter resistance to be appreciably high.

## KELVIN'S DOUBLE-BRIDGE METHOD

- It is modification of Wheatstone bridge in which errors due to contacts and lead resistances can be eliminated.
- Kelvin's double bridge incorporates idea of second set of ratio arms, p and q, and hence the name 'double bridge'.
- X is unknown low resistance to be measured, and S is known standard low resistance. 'r' is very low resistance connecting lead used to connect unknown resistance X to standard resistance S. Other resistances P, Q, p and q are of medium range.

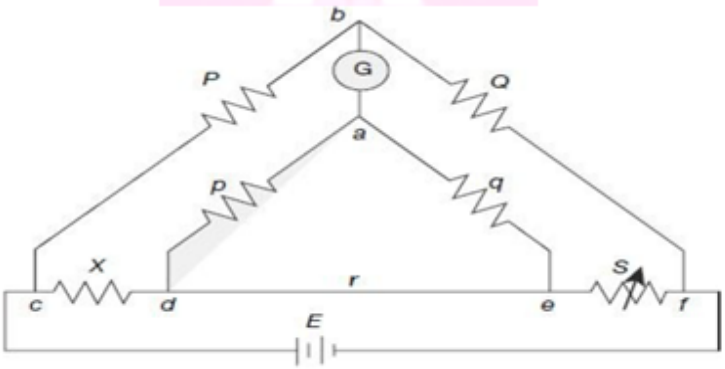


- Balance in bridge is achieved by adjusting S.
- Under balanced condition, potentials at nodes a and b must be equal in order that galvanometer G gives "null" deflection. Since at balance, no current flows through galvanometer, it can be considered to be open circuited.

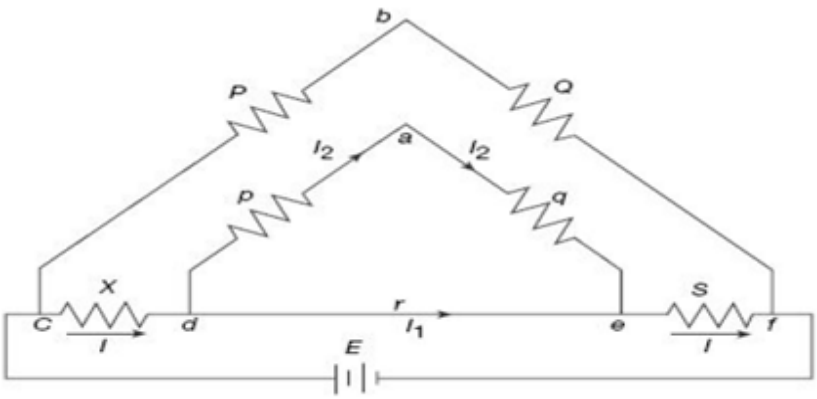


*Kelvin's double-bridge under balanced condition*

$$V_{cb} = V_{cda}$$

Now, $$V_{cb} = E \times \frac{P}{P+Q}$$

and $$V_{cda} = V_{cd} + V_{da} = X \times I + p \times I_2$$

where, $I_2 = I \times \dfrac{r}{r+p+q}$

$$\therefore \quad V_{cda} = I \times X + I \times \frac{pr}{r+p+q} = I\left(X + \frac{pr}{r+p+q}\right)$$

Supply voltage $E = V_{cd} + V_{de} + V_{ef} = I \times X + I \times \dfrac{(p+q)}{p+q+r} \times r + I \times S$

or, $$E = I\left(X + S + \frac{(p+q)}{p+q+r} \times r\right)$$

$$V_{cb} = \frac{P}{P+Q} \times I\left(X + S + \frac{(p+q)}{p+q+r} \times r\right)$$

$$\frac{P}{P+Q} \times I\left(X + S + \frac{(p+q)}{p+q+r} \times r\right) = I\left(X + \frac{pr}{r+p+q}\right)$$

$$\left(X + S + \frac{(p+q)}{p+q+r} \times r\right) = \left(1 + \frac{Q}{P}\right) \times \left(X + \frac{pr}{r+p+q}\right)$$

$$X + S + \frac{(p+q)}{p+q+r} \times r = X + \frac{pr}{r+p+q} + \frac{Q}{P} \times X + \frac{Q}{P} \times \frac{pr}{r+p+q}$$

$$S + \frac{(p+q)}{p+q+r} \times r = \frac{pr}{r+p+q} + \frac{Q}{P} \times X + \frac{Q}{P} \times \frac{pr}{r+p+q}$$

$$\frac{Q}{P} \times X = S + \frac{(p+q)}{p+q+r} \times r - \frac{pr}{r+p+q} - \frac{Q}{P} \times \frac{pr}{r+p+q}$$

$$\frac{Q}{P} \times X = S + \frac{pr}{p+q+r} + \frac{qr}{p+q+r} - \frac{pr}{r+p+q} - \frac{Q}{P} \times \frac{pr}{r+p+q}$$

$$\frac{Q}{P} \times X = S + \frac{qr}{p+q+r} - \frac{Q}{P} \times \frac{pr}{r+p+q}$$

$$\frac{Q}{P} \times X = S + \frac{qr}{p+q+r}\left(1 - \frac{Q}{P} \times \frac{p}{q}\right)$$

$$X = \frac{P}{Q} \times S + \frac{qr}{p+q+r}\left(\frac{P}{Q} - \frac{p}{q}\right)$$

- Second quantity can be made very small by making ratio P/Q as close as possible to p/q. In that case, there is no effect of connecting lead resistance 'r' on expression for unknown resistance. Thus, expression for unknown resistance

$$X = \frac{P}{Q} \times S$$

- However, in practice, it is never possible to make ratio p/q exactly equal to P/Q. Thus, there is always small error and hence, resistance value

$$X = \frac{P}{Q} \times S + \frac{q}{p+q+r} \times \Delta \times r$$

- It is thus always better to keep value of 'r' as small as possible, so that product Δ × r is extremely small and therefore error part can be neglected, and we can assume, under balanced condition,

$$X = \frac{P}{Q} \times S$$

## MEASUREMENT OF HIGH RESISTANCE

**Difficulties in Measurement of High Resistances:**

Since the resistances under measurement have high values, very small currents are encountered in measurement circuits. This aspect leads to several difficulties:

1. The insulation resistance of the resistor may be comparable with the actual value of the resistor. Thus leakage currents are produced which are of comparable magnitude to the current being measured. Leakage currents introduce errors in measurement. They vary depending upon the humidity conditions and cause unpredictable complications.
2. Due to electrostatic effect, stray changes can appear in measuring circuit causing errors. Alternating fields can also effect the measurements.
3. To obtain definite ratios in the potential distribution with respect to surroundings, one point of the circuit may be connected to earth for accuracy in measurements.
4. Effect of various factors like temperature and humidity upon the resistance should be taken into account. The kind of current employed, the magnitude and duration of the applied voltage and other factors also affect the resistance being measured.
5. In measurement of insulation resistance, the specimen often has considerable capacitance. Insulating materials possess the property of dielectric absorption. i.e., after the main charging current has decayed down, further charge is slowly absorbed over a considerable period of time. Hence, the conduction current measured includes some absorption in current.
6. Fairly high voltages are used in tests to raise the currents to reasonable values in order to be measured. So normally, a sensitive galvanometer or micro-ammeter is required and adequate steps have to be taken to prevent damage to these delicate instruments.

To solve the problem of leakage currents or capacitive currents we use a guard circuit. The concept of guard circuit is to bypass the leakage current from the ammeter to measure the true resistive current.

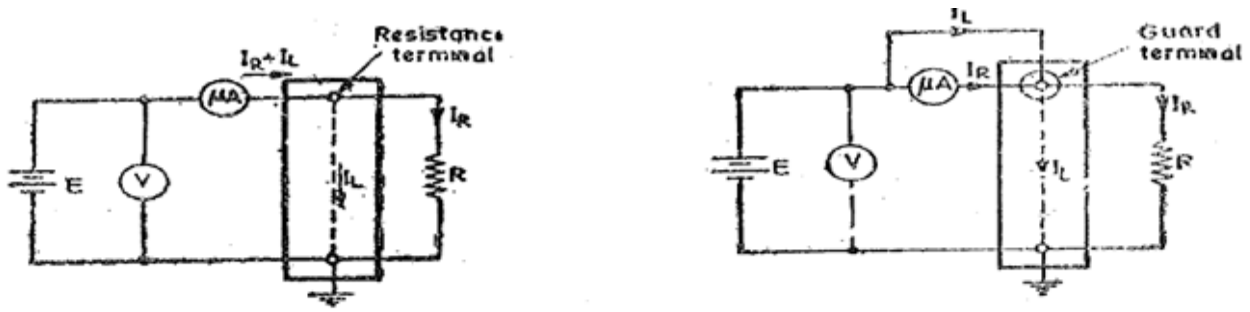


Application of guard circuit for measurement of high resistance.

- A high resistance mounted on a piece of insulating material is measured by the ammeter-voltmeter method.
- In the first circuit, the micro ammeter measures both resistive current and the current through the leakage path around the resistor leading to error in value of R.
- In the other circuit where the guard terminal surrounds the resistance terminal entirely, the leakage current bypasses the micro- ammeter. Hence, the micro ammeter reads only the resistive current.

## METHODS FOR MEASUREMENT OF HIGH RESISTANCE

- Loss of Charge Method
- Direct Deflection Method
- Megohm bridge
- Meggar

## LOSS OF CHARGE METHOD

Construction:

- R, an unknown insulation resistance to be measured is connected in parallel with a capacitor C and an electrostatic voltmeter.
- A battery with emf, V in parallel with R and C.

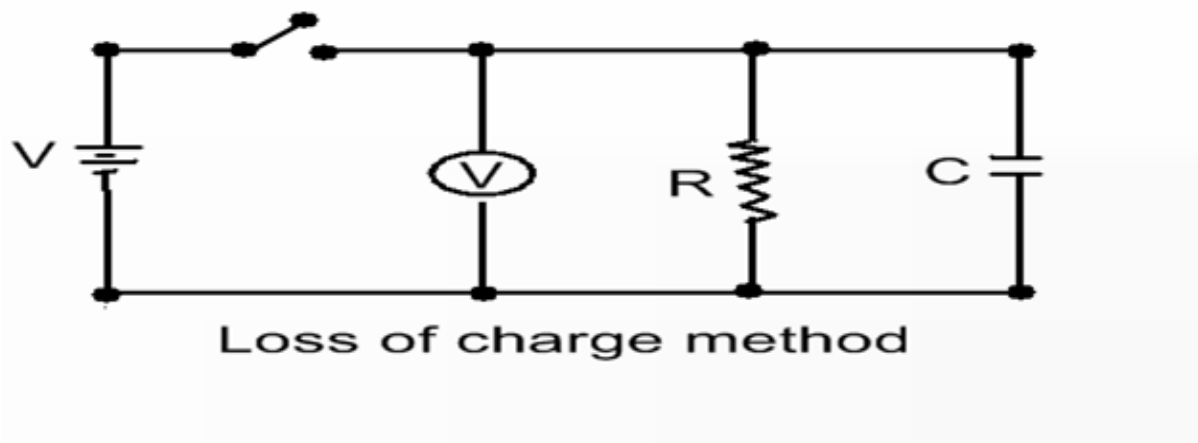


Operation:

- Capacitor is charged to suitable voltage by battery with voltage, V.

- Then allowed to discharge through resistance.
- Terminal voltage is observed over a considerable period of time during discharge.
- In this method, we utilize the equation of voltage across a discharging capacitor to find the value of unknown resistance R.
- After application of voltage, the voltage across capacitor at any instant, t is $v = V\ e{-}t/CR$

  $V/v = e^{t/RC}$

- Insulation Resistance , $R = t/\ [C\ \ln(V/v)]$

$$R = \frac{0.4343t}{C \log V/v}$$

- If $V$, $v$, $C$ and $t$ are known, the value of $R$ can be computed.
- The variation of voltage with time is shown:

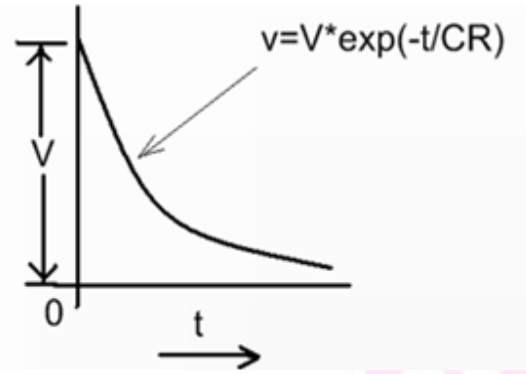


- If R is very large, time for appreciable fall in voltage is very large.
- Also, voltage-time curve will be very flat.
- Care is to be taken while measuring voltages at beginning and end of time, otherwise serious error may result in the measured value of R.

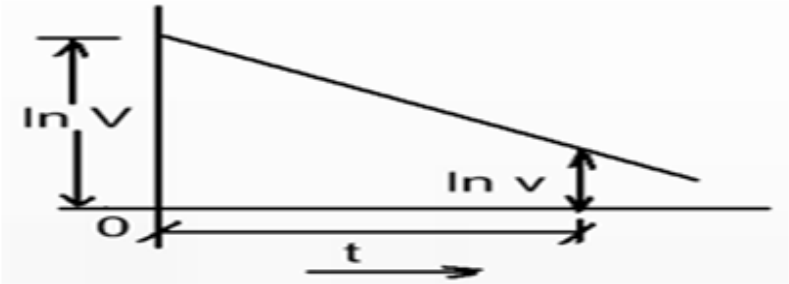


- More accurate results may be obtained by change in voltage, $e = (V - v)$ and R becomes

$$R = \frac{0.4343t}{C \log \frac{V}{V-e}}$$

- From experimental point of view, it may be advisable to determine the time $t$ from the discharge curve of the capacitor by plotting curve of $\ln v$ against time $t$. This yields more accurate results.

- However, the above case assumes no leakage resistance of the capacitor.
- Hence, to account for it we use the circuit shown in the figure below.

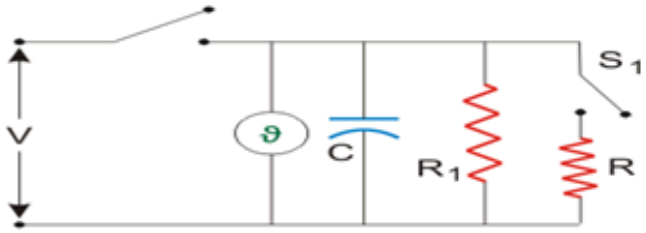


- R1 is the leakage resistance of C and R is the unknown resistance.
- We follow the same procedure but first with switch, S1 closed and next with switch S1 open.
- For the first case we get

$$R' = \frac{0.4343t}{C \log V/v}$$

$$R' = \frac{RR_1}{R + R_1}$$

- For second case with switch open we get

$$R_1 = \frac{0.4343t}{C \log V/v}$$

## MEASUREMENT OF EARTH RESISTANCE

Earth electrode for an electrical system is necessitated due to:

- All parts of electrical equipment must be at earth potential. Therefore, they must be connected to an earth electrode, which provides a continuous low resistance path for leakage currents to flow to earth and protects various parts of installation as well as persons working.
- In the event of overvoltage, equipment parts do not attain dangerously high potentials.
- Neutral of three-phase system is earthed so that potential of circuit with respect to earth is stabilized.

Resistance of earth electrode should be low to give good protection.

Resistance of earthing system depends on:

- Shape and material of earth electrode used.
- Depth in soil at which the electrodes are buried.

- Specific resistance of soil surrounding and in the neighborhood of electrodes. Specific resistance of soil is not constant but varies from one type of soil to another. The amount of moisture present in soil also affects its specific resistance.

## METHODS OF MEASURING EARTH RESISTANCE

### Fall of Potential Method

- A current is passed through earth electrode, E to an auxiliary electrode, B.
- A second auxiliary electrode, A is inserted in earth between E and B.
- Potential difference, V between E and A is measured for a given current, I.
- Resistance of earth, $R_E = V/I$ or $V_{EA}/I$.
- Position of electrodes E and B is fixed and position of electrode A is changed and resistance measurements are done for various positions of electrode A.

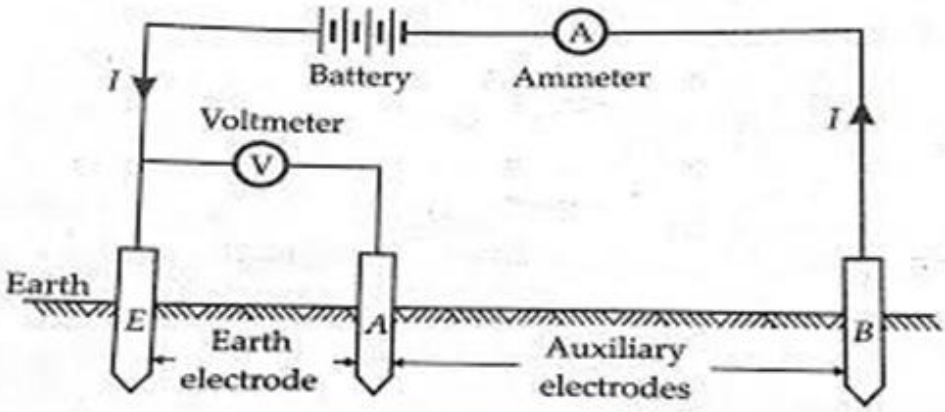


- A graph is plotted between earth resistance against the distance between electrode E and A.
- Measured value of earth resistance depends upon position of auxiliary electrode A.
- Earth resistance rises rapidly initially, then becomes constant and rises again when auxiliary electrode A approaches B.
- Correct value of $R_E$ is when A is at such a distance that resistance lies on the flat part of curve.

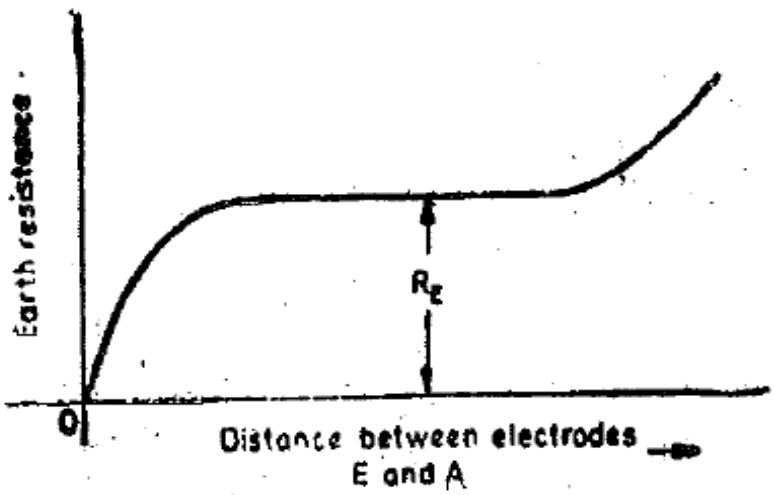

## Earth Tester

- Special type of Meggar with a rotating current reverser and a rectifier, which are simple commutators, made up of L shaped segments and mounted on shaft of hand driven generator.
- Each commutator has four fixed brushes.

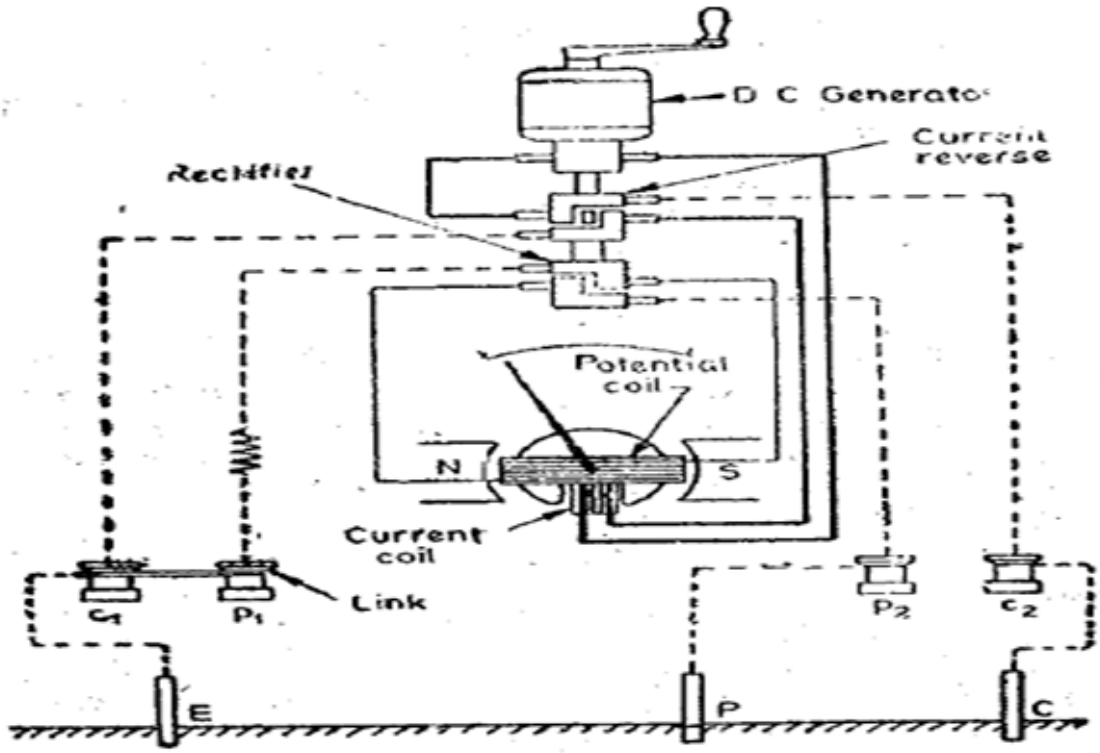


- One pair of each set of brushes is so positioned that they make contact alternately with one segment and then with other as commutator rotates.
- Second pair of each set of brushes is positioned on commutator so that continuous contact is made with one segment.
- Earth tester has four terminals P1, P2 and C1, C2.
- P1 and C1 are shorted and connected to earth electrode.
- P2 and C2 are connected to auxiliary electrodes P and C respectively.
- Indication of earth tester depends upon ratio of voltage across potential coil and current through the coil.
- Deflection of pointer indicates resistance of earth directly.
- Earth tester operates on d.c., but reverser and rectifier helps it to operate on a.c.
- Use of a.c. passing through soil eliminates unwanted effects due to production of a back emf in the soil on account of electrolytic action.
- Also, the instrument is free from effects of alternating or direct currents present in the soil.

## AC BRIDGES

- It consists of four arms, a source of excitation and a balance detector.
- It is similar to DC Wheatstone Bridge, expect that the arms are impedances and battery and galvanometer are replaced respectively by a.c. source and detector sensitive to small alternating potential differences.
- Detectors used are headphones (250 Hz to 4 kHz), vibration galvanometers (5 Hz to 1000 Hz) and tuneable amplifier detectors (10 Hz to 100 kHz).

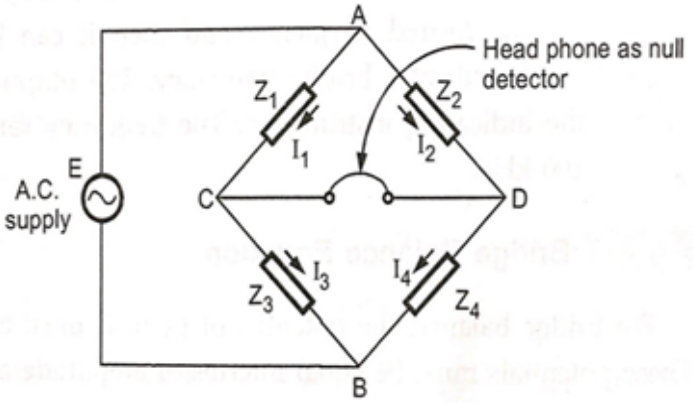


### Bridge Balance equation

For bridge balance, there should be no current through detector, which requires that potential difference between points C and D should be zero. Thus, voltage drop across AC must be equal to AD.

$V_{AC} = V_{AD}$, $I_1Z_1 = I_2Z_2$

When the bridge is balanced,

$$\bar{I}_3 = \bar{I}_1 \quad \text{and} \quad \bar{I}_4 = \bar{I}_2$$

$$\bar{I}_1 = \frac{\bar{E}}{\bar{Z}_1 + \bar{Z}_3}$$

$$\bar{I}_2 = \frac{\bar{E}}{\bar{Z}_2 + \bar{Z}_4}$$

Substituting, we get,

$$\frac{\bar{E}\cdot\bar{Z}_1}{\bar{Z}_1 + \bar{Z}_3} = \frac{\bar{E}\cdot\bar{Z}_2}{\bar{Z}_2 + \bar{Z}_4} \quad \text{i.e.} \quad \overline{Z_1Z_2} + \overline{Z_1Z_4} = \overline{Z_1Z_2} + \overline{Z_2Z_3}$$

$$\overline{Z_1Z_4} = \overline{Z_2Z_3}$$

## Maxwell's Inductance Bridge

It can be used to measure inductance by comparison with a variable standard self-inductance.

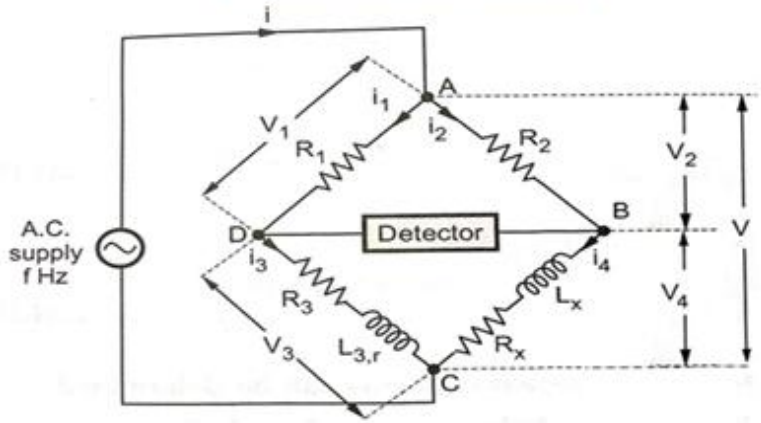


$$\frac{R_1}{[(R_3 + r) + j\omega L_3]} = \frac{R_2}{R_x + j\omega L_x}$$

$$R_1 [R_x + j\omega L_x] = R_2 [(R_3 + r) + j\omega L_3]$$

$$R_1 R_x + j\omega R_1 L_x = R_2 (R_3 + r) + j\omega R_2 L_3$$

Equating imaginary terms, we can write $R_1 L_x = R_2 L_3$

$$\boxed{L_x = \frac{R_2}{R_1} L_3}$$

Equating real terms, we can write, $R_1 R_x = R_2 (R_3 + r)$

$$\boxed{R_x = \frac{R_2}{R_1} (R_3 + r)}$$

## Maxwell's Inductance Capacitance Bridge

It can be used to measure inductance by comparison with a standard variable capacitance.

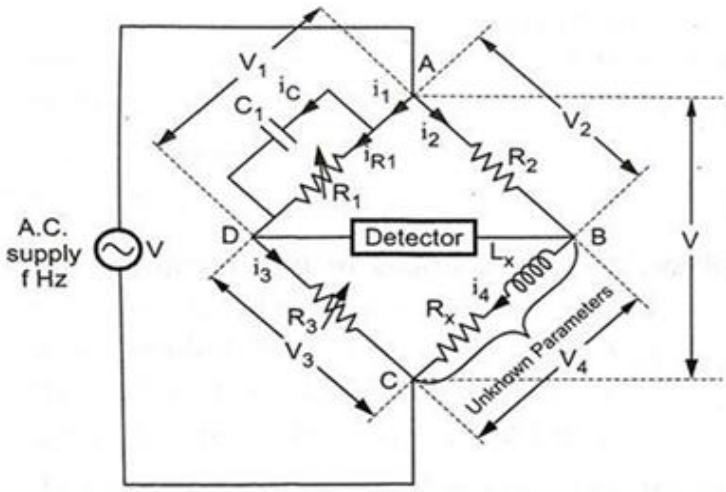


The general bridge balance equation is,

$$\overline{Z_1}\ \overline{Z_x} = \overline{Z_2}\ \overline{Z_3}$$

$$\overline{Z_x} = \frac{\overline{Z_2}\ \overline{Z_3}}{\overline{Z_1}} = \overline{Z_2}\ \overline{Z_3}\ \overline{Y_1}$$

where $\overline{Y_1} = \frac{1}{\overline{Z_1}}$ i.e. $R_1$ in parallel with $C_1$

$$\overline{Z_2} = R_2 \quad \text{and} \quad \overline{Z_3} = R_3$$

$$\overline{Z_x} = R_x + j\omega L_x \text{ , as } L_x \text{ in series with } R_x$$

Now $$\overline{Y_1} = \frac{1}{R_1} + j\omega C_1$$

as $$\overline{Z_1} = R_1 \,||\left(\frac{1}{j\omega C_1}\right)$$

Substituting we get,

$$R_x + j\omega L_x = R_2 R_3 \left[\frac{1}{R_1} + j\omega C_1\right]$$

$$\therefore \quad R_x + j\omega L_x = \frac{R_2 R_3}{R_1} + jR_2R_3\omega C_1$$

Equating real parts,

$$\boxed{R_x = \frac{R_2 R_3}{R_1}}$$

Equating imaginary parts, $\omega L_x = R_2 R_3 \omega C_1$

$$\boxed{L_x = R_2 R_3 C_1}$$

The quality factor of the coil is given by,

$$Q = \frac{\omega L_x}{R_x} = \frac{\omega R_2 R_3 C_1}{\left(\frac{R_2 R_3}{R_1}\right)}$$

$$\boxed{Q = \omega R_1 C_1}$$

### Advantages of Maxwell's Bridge

1. Final balance equations are independent of frequency.
2. The unknown quantities can be denoted by simple expressions involving known quantities.
3. Balance equation is independent of losses associated with the inductor.
4. A wide range of inductance at power and audio frequencies can be measured.

### Disadvantages of Maxwell's Bridge

1. The bridge, for its operation, requires a standard variable capacitor, which can be very expensive if high accuracies are asked for. In such a case, fixed value capacitors are used and balance is achieved by varying resistors.
2. This bridge is limited to measurement of low $Q$ inductors ($1 < Q < 10$).
3. Maxwell's bridge is also unsuited for coils with very low value of $Q$ (e.g., $Q < 1$). Such low $Q$ inductors can be found in inductive resistors and RF coils. Maxwell's bridge finds difficult and laborious to obtain balance while measuring such low $Q$ inductors.

## SCHERING BRIDGE

- It is most widely used AC Bridge for the measurement of unknown capacitance, dielectric loss and power factor.

- It can be used for low voltages.

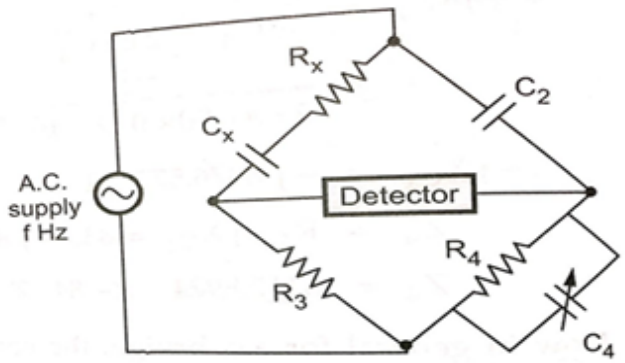


- $C_2$ is standard air or gas loss free capacitor with very stable value.
- $R_4$ is non-inductive resistance in parallel with variable capacitor $C_4$.
- $R_3$ is also non-inductive resistance.
- $C_X$ is unknown capacitance to be measured.
- $R_X$ is series resistance representing loss in capacitor $C_X$.

From the general balance equation, $Z_1 Z_4 = Z_2 Z_3$

$$Z_1 = R_x - j\frac{1}{\omega C_x}$$

$$Z_2 = -\frac{j}{\omega C_2}$$

$$Z_3 = R_3$$

$$Z_4 = R_4 \,||\, \frac{-j}{\omega C_4} = \frac{R_4\left(-\frac{j}{\omega C_4}\right)}{\left(R_4 - j\frac{1}{\omega C_4}\right)}$$

$$Z_4 = \frac{-j R_4}{\omega R_4 C_4 - j} = \frac{-j R_4 (\omega R_4 C_4 + j)}{(\omega R_4 C_4 - j)(\omega R_4 C_4 + j)} = \frac{R_4 - j\omega R_4^2 C_4}{\omega^2 R_4^2 C_4^2 + 1}$$

$$Z_1 = \frac{Z_2 Z_3}{Z_4} = \frac{\left(-\frac{j}{\omega C_2}\right)(R_3)}{\left(\frac{R_4 - j\omega R_4^2 C_4}{1+\omega^2 R_4^2 C_4^2}\right)} = \frac{(1+\omega^2 R_4^2 C_4^2) R_3 \left(-\frac{j}{\omega C_2}\right)}{(R_4 - j\omega R_4^2 C_4)}$$

Rationalising, $Z_1 = R_3 (1+\omega^2 R_4^2 C_4^2) \left\{ \frac{-\frac{j}{\omega C_2}(R_4 + j\omega R_4^2 C_4)}{R_4^2 + \omega^2 R_4^4 C_4^2} \right\}$

$$\therefore \quad R_x - j\frac{1}{\omega C_x} = \frac{R_3 (1+\omega^2 R_4^2 C_4^2)}{R_4^2 (1+\omega^2 R_4^2 C_4^2)} \left\{ \frac{R_4^2 C_4}{C_2} - \frac{j R_4}{\omega C_2} \right\}$$

Equating real and imaginary parts,

$$\boxed{R_x = \frac{R_3}{R_4^2} \times \frac{R_4^2 C_4}{C_2} = \frac{R_3 C_4}{C_2}}$$

$$j\frac{1}{\omega C_x} = j\frac{R_3}{R_4^2} \times \frac{R_4}{\omega C_2} = j\left[\frac{1}{\frac{R_4}{R_3}\omega C_2}\right]$$

$$\omega C_x = \frac{R_4}{R_3}\omega C_2$$

$$\boxed{C_x = \frac{R_4}{R_3} C_2}$$

$$\text{p.f.} = \cos\phi_x = \frac{R_x}{Z_x}$$

phase angles very close to 90°,

$$\text{p.f.} = \frac{R_x}{X_x} = \frac{R_x}{\left(\frac{1}{\omega C_x}\right)}$$

$$\boxed{\text{p. f.} = \omega R_x C_x}$$

## WIEN'S BRIDGE

- Used for measurement of frequency, but also used for the measurement of unknown capacitance with great accuracy.
- One ratio arm consists of a series RC circuit, $R_1$ & $C_1$.
- Second ratio arm consists of a resistance $R_2$.
- Third arm consists of $R_3$ and $C_3$ connected in parallel.
- The fourth arm is pure resistance $R_4$.

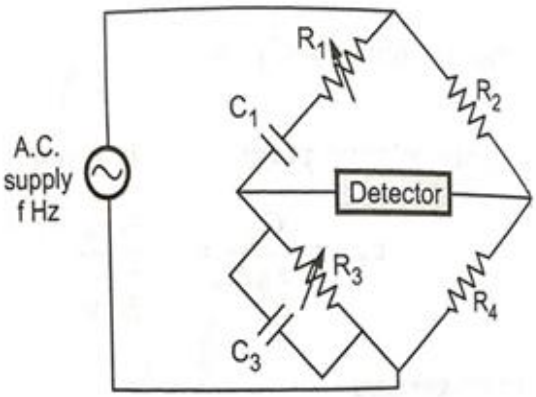


$$Z_1 = R_1 - j\left(\frac{1}{\omega C_1}\right), \quad Z_2 = R_2$$

$$Z_3 = R_3 \,||\, C_3, \qquad Y_3 = \frac{1}{R_3} + j\omega C_3$$

and $$Z_4 = R_4$$

The balance condition is,

$$\overline{Z_1 Z_4} = \overline{Z_2 Z_3}$$

$$\therefore \quad \overline{Z_2} = \frac{\overline{Z_1 Z_4}}{\overline{Z_3}} = Z_1 \overline{Z_4 Y_3}$$

$$\therefore \quad R_2 = \left[R_1 - j\left(\frac{1}{\omega C_1}\right)\right] R_4 \left[\frac{1}{R_3} + j\omega C_3\right]$$

$$\therefore \quad R_2 = R_4\left[\frac{R_1}{R_3} + j\omega R_1 C_3 - j\frac{1}{\omega C_1 R_3} + \frac{C_3}{C_1}\right]$$

$$\therefore \quad R_2 = R_4\left[\frac{R_1}{R_3} + \frac{C_3}{C_1}\right] + jR_4\left[\omega R_1 C_3 - \frac{1}{\omega C_1 R_3}\right]$$

Equating real parts of both sides,

$$R_2 = \frac{R_4 R_1}{R_3} + \frac{C_3 R_4}{C_1}$$

$$\therefore \quad \boxed{\frac{R_2}{R_4} = \frac{R_1}{R_3} + \frac{C_3}{C_1}}$$

Equating imaginary parts of both sides,

$$\omega R_1 C_3 - \frac{1}{\omega C_1 R_3} = 0 \quad \text{i.e.} \quad \omega^2 = \frac{1}{R_1 R_3 C_1 C_3}$$

$$\omega = \frac{1}{\sqrt{R_1 C_1 R_3 C_3}}$$

$$\boxed{f = \frac{1}{2\pi\sqrt{R_1 C_1 R_3 C_3}}}$$

Generally the components are selected in such a way that,

$R_1 = R_3 = R$ and $C_1 = C_3 = C$

We have $\frac{R_2}{R_4} = \frac{R_1}{R_3} + \frac{C_3}{C_1}$

$$\frac{R_2}{R_4} = 2$$

$$\boxed{f = \frac{1}{2\pi RC}}$$

**POTENTIOMETERS**

- It is an instrument designed to measure an unknown voltage by comparing it with a standard known voltage.
- Measurements using comparison methods have high accuracy, as the result does not depend on actual deflection of pointer, but only upon accuracy with which voltage of reference source is known.

- They are extensively used for calibration of voltmeters and ammeters.
- **Types:**

  DC potentiometer

  AC potentiometer

**DC POTENTIOMETER**

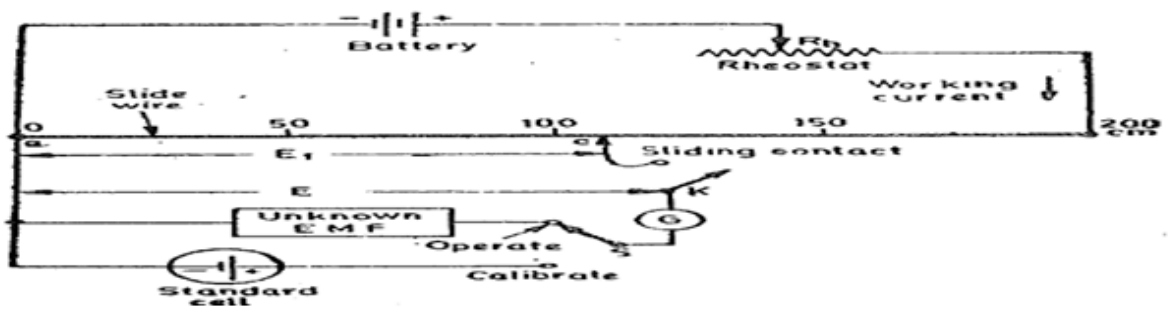


- Simplest and basic type is slide-wire dc potentiometer.
- It consists of slide wire made of platinum-silver alloy with uniform cross-section and hence uniform resistance along its entire length. It is stretched between two terminals on a flat board

with a scale fixed along side. Sliding contact is made of copper-gold-silver alloy. Manganin resistors are used.

- First, the switch S is put in the 'operate' position and the galvanometer key K kept open, the battery supplies the working current through the rheostat and the slide wire.
- The working current through the slide wire may be varied by changing the rheostat setting.
- The method of measuring the unknown voltage, E depends upon finding a position for the sliding contact such that the galvanometer shows zero deflection, when the galvanometer key K is closed. Zero galvanometer deflection means that the unknown voltage E is equal to the voltage drop E1, across portion a–c of the slide wire.
- Measure the length a-c of the slide wire. Let it be l.
- Let r be the resistance per unit length of the slide wire and i be the current through the slide wire.
- The unknown voltage, E= irl
- <u>If emf of two batteries B1 and B2 are to be compared:</u>

  First insert B1 in series with galvanometer and measure the length l1 and calculate E1 = irl1. Repeat with second battery to measure E2=irl2. Then, E1/E2 = l1/l2. The ratio of two lengths gives the ratio of two emf's. By knowing, anyone value of battery we can easily find out the other battery voltage.

<u>Standardisation of a potentiometer</u>

- Since the resistance of slide wire is known accurately, the voltage drop along the slide wire can be controlled by adjusting the value of working current. The process of adjusting the working current to match the voltage drop across a portion of sliding wire against a standard reference source is known as 'standardisation'.
- Let total length of slide wire be 200cm and has a resistance of 200Ω. The emf of standard cell is 1.0186V. When switch S is placed at 'calibrate' position, a standard or reference cell is connected to the circuit, which is used to standardize the potentiometer. Keep sliding contact at 101.86cm. Rheostat is adjusted to vary working current until zero deflection of galvanometer, when key K is closed.
- Since 101.86cm portion of slide wire has resistance of 101.86Ω, working current becomes 1.0186/ 101.86 =10 mA.

- Voltage at any point along the slide wire is proportional to the length of slide wire. So voltage is obtained by converting calibrated length into corresponding voltage by simply placing decimal point in the proper position. For example, 153.6cm corresponds to 1.536V.
- If the potentiometer has been calibrated once, its working current is never changed.

**Calibration of Voltmeter**

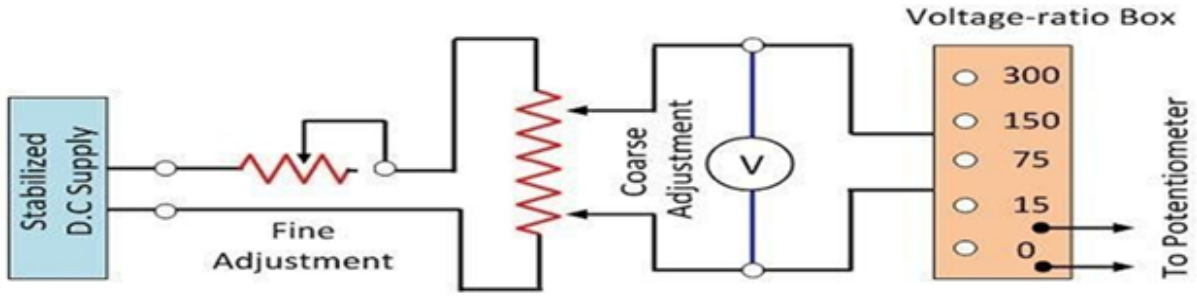


In case of calibration of voltmeter, the main requirement is that a suitable stable dc voltage supply is available; otherwise, any change in the supply voltage will cause a change in the voltmeter calibration.

- The potential divider network consists of two rheostats, one for coarse and other for fine control of calibrating voltage. These controls are connected to supply source and with these controls, it is possible to adjust the voltage so that the pointer coincides exactly with a major division of the voltmeter.
- The voltage ratio box is used to step-down the voltage to a suitable value for the potentiometer.
- In order to get accurate measurements, it is necessary to measure voltages near maximum range of potentiometer, as far as possible.
- The potentiometer measures the true value of the voltage.
- If the reading of the potentiometer does not match with the voltmeter reading, a positive or negative error is indicated.
- A calibration curve may be drawn with the help of the potentiometer and the voltmeter reading.

**Calibration of Ammeter**

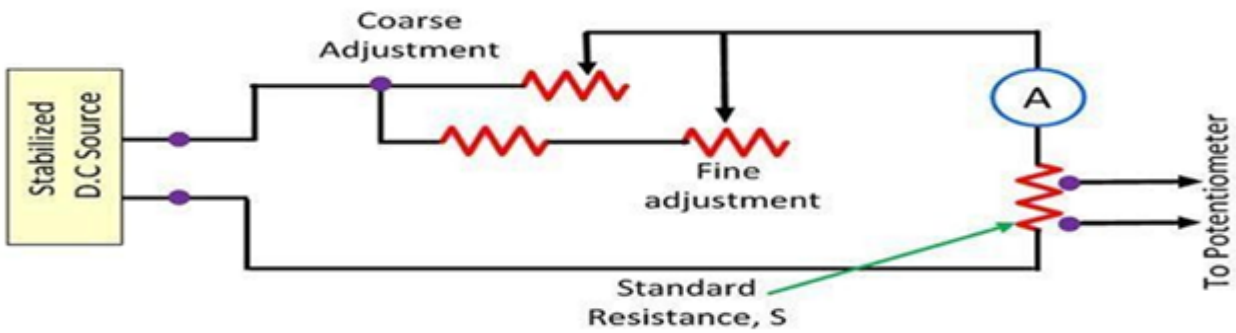

A standard resistance of suitable value, S and sufficient current carrying capacity is placed in series with the ammeter under calibration.

- Voltage drop across S is measured with help of potentiometer and then the current through S can be computed as I = Vs/S where, $V_s$ is voltage across standard resistor as indicated by potentiometer.
- Now, compare ammeter reading with the current found by calculation. If they do not match, a positive or negative error results. A calibration curve may be drawn between ammeter reading and true value of current obtained using potentiometer.
- As the resistance of the standard resistor S is accurately known and the voltage across S is measured by a potentiometer, this method of calibration of ammeter is very accurate.

**Calibration of Wattmeter**

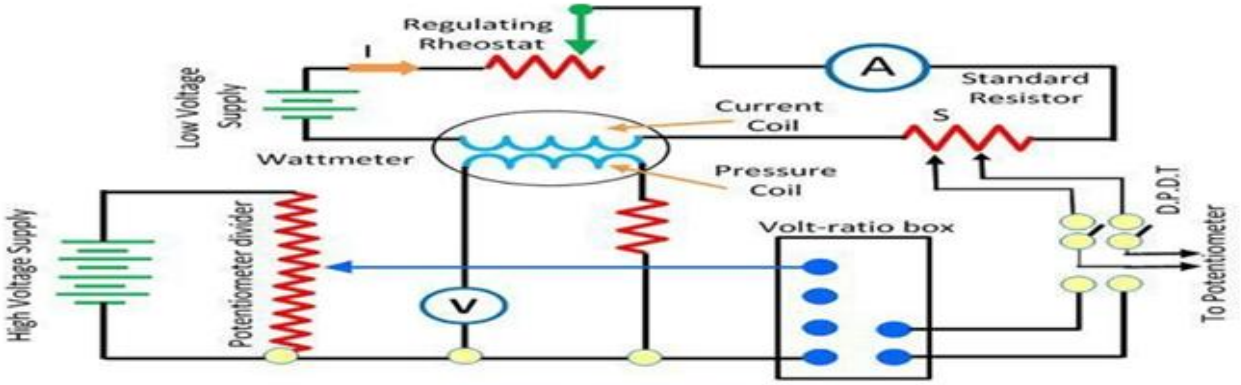


- The current coil of the wattmeter is supplied from low voltage supply and a series rheostat is inserted to adjust the value of current.
- Pressure coil is supplied from the normal supply through potential divider.
- A volt-ratio box is used to step down the voltage for the potentiometer to read.
- The actual value of voltageand current are measured with potentiometer using a double pole double throw (D.P.D.T.) switch. While voltage is measured directly by the potentiometer, the current through the current coil is measured by measuring the voltage drop across a standard resistor connected in series with the current coil and dividing the value by the standard resistance.
- The true power is then VI.
- Wattmeter reading may be compared with this value.
- If these two values are not matching, there will be some error and a calibration curve may be drawn.

## ELECTROSTATIC VOLTMETERS

- Deflecting torque is produced by action of electric field on charged conductors.
- Used for high voltage measurements.
- There are two ways in which the force act:

i. Involves two oppositely charged electrodes. One fixed while other movable. Due to force of attraction, movable electrode is drawn towards fixed one.

ii. In other type, there are forces of attraction or repulsion or both between electrodes, which cause rotary motion of moving electrode.

In both cases, mechanism resembles a variable capacitor.

***Force and torque equations***: *Stored energy is the basis for derivation.*

1. Linear Motion

- Plate A is fixed and B is movable.
- The plates are oppositely charged and are restrained by a spring connected to the fixed point.
- Let a potential difference of V volt be applied to the plates; then a force of attraction F Newton exists between them. Plate B moves towards A until the force is balanced by the spring.
- The capacitance between the plates is then C Farad and the stored energy is $1/2CV^2$ joule.
- Now let there be a small increment dV in the applied voltage, then the plate B moves a small distance dx towards A.
- When the voltage is being increased, a capacitive current flows.

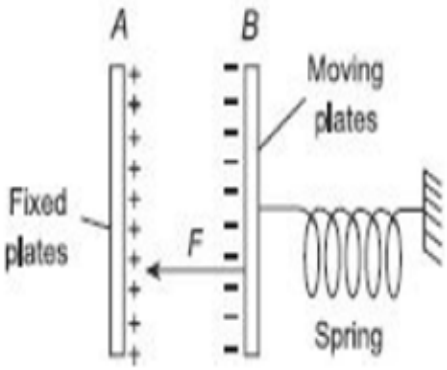


- This current is given by

$$i = \frac{dq}{dt} = \frac{d}{dt}(CV) = C\frac{dV}{dt} + V\frac{dC}{dt}$$

- The input energy is

$$Vidt = V^2 dC + CVdV$$

- Change in stored energy

$$= \frac{1}{2}(C + dC)(V + dV)^2 - \frac{1}{2}CV^2$$

$$= \frac{1}{2}V^2 dC + CVdV$$

(Neglecting the higher order terms as they are small quantities)

- From the principle of conservation of energy,

Input electrical energy = increase in stored energy + mechanical work done

$$V^2 dC + CVdV = \frac{1}{2}V^2 dC + CVdV + Fdx$$

$$\boxed{F = \frac{1}{2}V^2 \frac{dC}{dx}}$$

2. Rotational Motion

- Here, angular displacement θ is used in place of linear displacement x and deflecting torque Td instead of force F
- Deflecting torque

$$T_d = \frac{1}{2}V^2 \frac{dC}{d\theta}$$

- If the instrument is spring controlled or has a suspension then, Controlling torque $T_C = k\theta$ ;

  k = spring constant and θ = deflection
- Since $T_d = T_C$ , deflection,

$$\boxed{\theta = \frac{1}{2}\frac{V^2}{k}\frac{dC}{d\theta}}$$

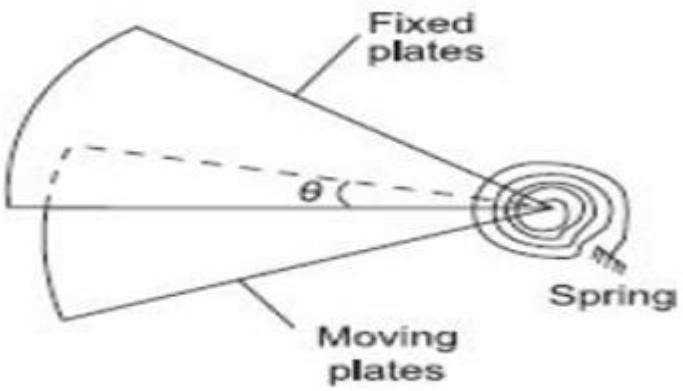


- Since the deflection is proportional to the square of the voltage to be measured, the instrument can be used on both ac and dc.
- The instrument exhibits a square law response and hence the scale is non-uniform and is compressed at the lower end.

## ATTRACTED DISC TYPE- KELVIN ABSOLUTE ELECTROMETER

- Consists of two discs – one moving and other fixed.
- Moving disc is carried by a spring and is suspended from a micrometer head.
- Moving disc is provided with a guard ring to reduce the fringing effects.
- Zero setting is done with help of optical sighting system

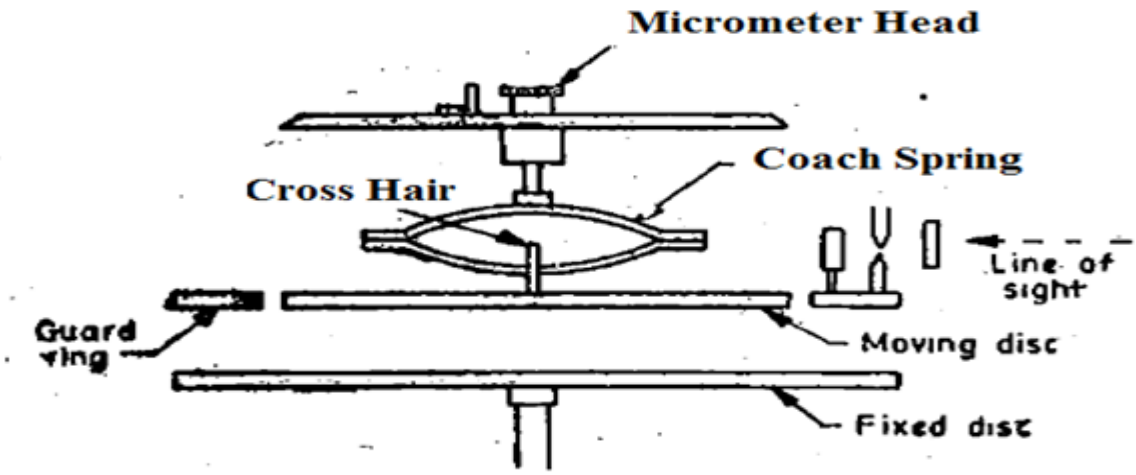


- Voltage to be measured is applied between two discs.
- Moving disc is attracted downwards.
- It is brought back to zero position by turning micrometer head.
- Displacement is measured by micrometer calibrated in terms of force.
- Hence, voltage is determined in terms of force.

Let

$d$ = distance between plates ; m,

$A$ = area of plates ; m$^2$,

= area of moving plate + ½ area of air gap between moving plate and guard ring,

$\epsilon$ = permittivity of dielectric ; F/m,

$V$ = voltage being measured ; V,

$F$ = force between discs ; N.

force $F = \frac{1}{2} V^2 \frac{dC}{dx}$

But for a capacitor with closely spaced plates

$$\frac{dC}{dx} = \frac{C}{d} \quad \text{and} \quad C = \frac{\epsilon A}{d} \quad \therefore \; F = \frac{1}{2} \epsilon A \frac{V^2}{d^2} \text{ newton}$$

Hence voltage $V = \sqrt{\frac{2Fd^2}{\epsilon A}}$ volt

This theory shows that such an instrument will give an absolute determination of potential difference, as the p.d. is given in terms of force and linear dimensions.

**Advantages of Electrostatic Instruments**

1. These instruments draw negligible power from the mains.
2. They may be used on both ac and dc.

3. They have no frequency and waveform errors as the deflection is proportional to square of voltage and there is no hysteresis.

4. There are no errors caused by the stray magnetic fields as the instrument works on the electrostatic principle.

5. They are particularly suited for high voltages.

**Disadvantages of Electrostatic Instruments**

1. The use of electrostatic instruments is limited to certain special applications, particularly in ac circuits of relatively high voltage, where the current drawn by other instruments would result in erroneous indications. A protective resistor is generally used in series with the instrument in order to limit the current in case of a short circuit between plates.

2. These instruments are expensive, large in size and are not robust in construction.

3. Their scale is not uniform.

4. The operating forces are small.

**SPHERE GAPS**

- Breakdown voltage of spark gap between two metal spheres is used as a measure of voltage.
- Consists of two equal sized, polished aluminium or (aluminium alloy) spheres separated by an air gap.
- Spheres are mounted vertically one above other, with lower sphere earthed.

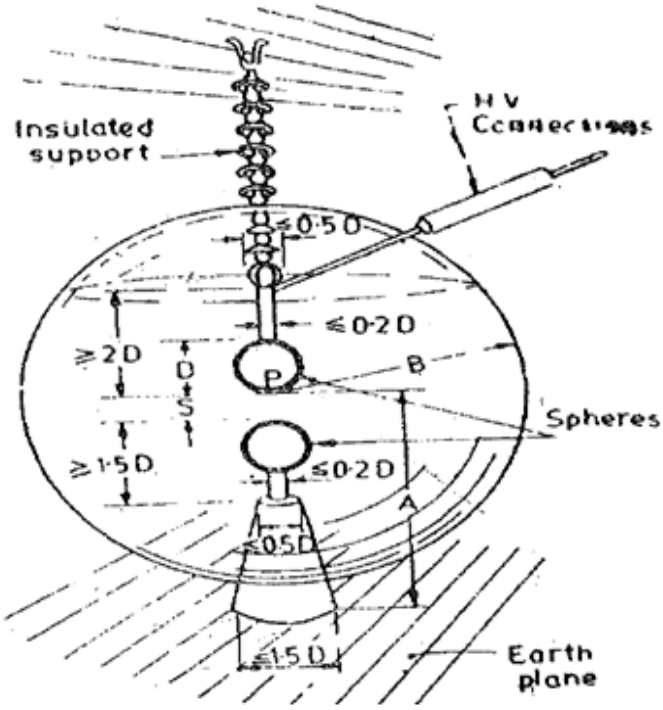


- Voltage between spheres is raised until a spark passes between two spheres.
- Value of voltage required to spark over (breakdown) depends upon the dielectric strength of air, size of spheres, distance between spheres and many other factors.
- Calibration tables are prepared for different sizes of spheres, different gap lengths etc.

- Breakdown voltages are read directly from the calibration tables.
- Calibration tables give rms values of spark over voltages.
- To obtain peak voltages, rms values must be multiplied by √2.

**Advantages:**

- Used for determination of peak value of voltage. Mainly used for calibration of voltmeters and voltage measuring devices for high voltage tests.
- Simple, cheap and reliable method
- May be used for measurement of voltage in surge (impulse) tests.

**Disadvantages:**

- Do not give a continuous record of voltage.
- Not highly accurate.

## DC HALL EFFECT SENSORS - HIGH CURRENT MEASUREMENTS

- The principle of the "Hall Effect" is made use of in measuring very high direct currents.
- If electric current flows through a metal plate located in a magnetic field perpendicular to it, Lorenz forces will deflect the electrons in the metal structure in a direction normal to the direction of both the current and the magnetic field.
- The charge displacement generates an emf in the normal direction, called the Hall voltage. The Hall voltage is proportional to the current I, the magnetic flux density B, and the reciprocal of the plate thickness d and the proportionality constant, $R_H$ called the Hall coefficient.

$$V_H = R_H \cdot \frac{BI}{d}$$

- For metals, the Hall coefficient is very small, and hence semiconductor materials such as Gallium Arsenide, Indium Antimonide or Indium Arsenide are used, for which the hall coefficient is high.

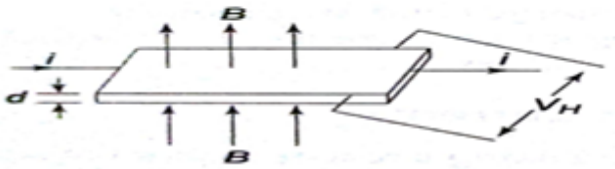


$VH = R \cdot \frac{BI}{d}$ ; $R$ = Hall coefficient

(a) Hall effect

- In large current measurements, the current carrying conductor is surrounded by an iron cored magnetic circuit, so that the magnetic field intensity H is produced in a small air gap in the core. The hall element is placed in the air gap and a small dc current is passed through the element.

The voltage developed across the Hall element in the normal direction is proportional to the dc current I.

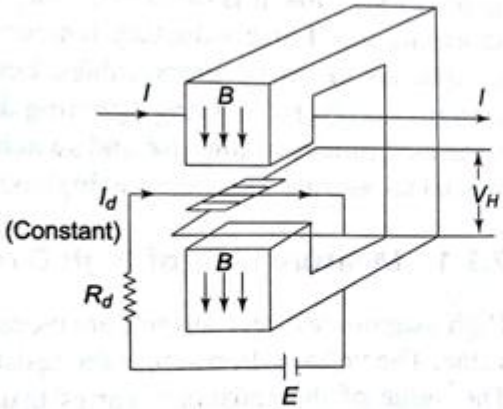

(b) Hall generator

- Hall coefficient R depends on the temperature and high magnetic field strengths, and suitable compensation has to be provided when used for measurement of very high current.
- Hall generators can be used for measurement of unidirectional ac and impulse currents also.

# MODULE – 4
# MAGNETIC, LUMEN & TEMPERATURE MEASUREMENTS

4.1 Measurement of flux and permeability - flux meter, BH curve and permeability measurement – hysteresis measurement.

4.2 Ballistic galvanometer – principle- determination of BH curve - hysteresis loop. Lloyd Fisher square – measurement of iron losses.

4.3 Measurement luminous intensity – Photoconductive Transducers - Photovoltaic cells.

4.4 Temperature sensors - Resistance temperature detectors - negative temperature coefficient – Thermistors – thermocouples - silicon temperature sensors.

## MAGNETIC MEASUREMENTS

- Measurement of various properties of a magnetic material is known as magnetic measurements.
- Magnetic materials have very important role in operation of electrical machines.

**Magnetic measurement includes:**

- Measurement of magnetic field strength in air
- Determination of B-H curve and hysteresis loop
- Determination of Eddy Current and Hysteresis Loss
- Testing of permanent magnet

**Inaccuracies in magnetic measurements are due to:**

- The conditions in the magnetic specimen under test are different from those assumed in calculations
- The magnetic materials are not homogeneous
- There is no uniformity between different batches of test specimens even if such batches are of the same composition.

**Instruments used:** Ballistic galvanometer and flux meter are the necessary instruments for various types of magnetic measurements.

**Types of tests:**

1. Ballistic test (D.C. test)
   - Used to determine B-H curve & hysteresis loop
   - DC is supplied to provide adjustable mmf and flux density is measured using ballistic galvanometer or flux meter
2. A.C. testing
   - Used to determine eddy current and hysteresis losses
   - Carried at power, audio or radio frequency
3. Steady state test
   - Used to determine steady value of flux density in air gap

## BALLISTIC GALVANOMETER

- Used to measure quantity of electricity passed through it.
- This quantity of electricity is due to instantaneous emf induced in a search coil connected across the ballistic galvanometer and this instantaneous emf is induced when flux linking with search coil is changed.
- Ballistic galvanometer gives a 'throw' (deflection) proportional to quantity of current passed through it.

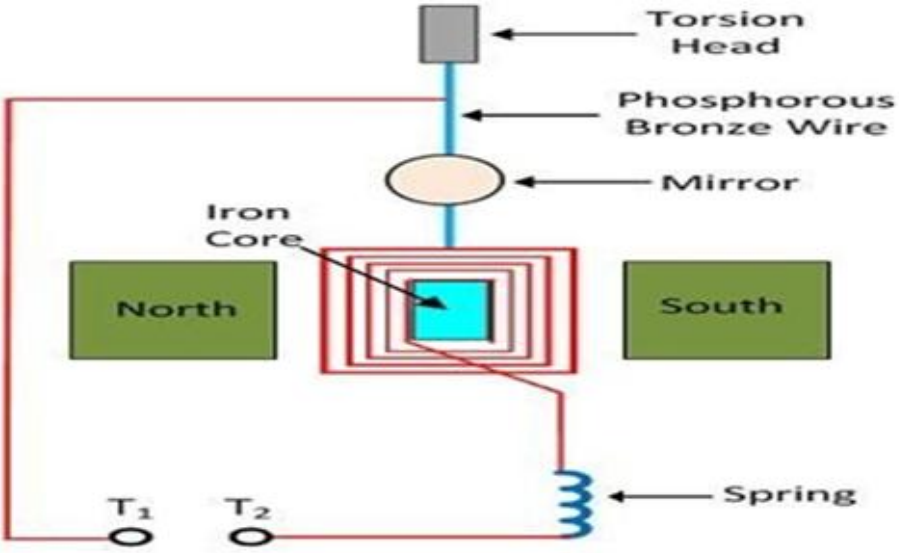


Ballistic Galvanometer

- The scale is calibrated to get quantity of electricity and change in flux from its throw.
- A beam of light is cast on the mirror and the light is reflected on a scale from which deflection is measured.
- Moving system will vibrate upto 10-15 seconds.
- To bring needle back to zero, terminals are short-circuited.

## FLUX METER

- Special type of Ballistic Galvanometer with low controlling torque and heavy electromagnetic damping.
- The flux meter has a coil which is freely suspended from a spring support with help of a single silk thread.
- The coil moves freely between the poles of the permanent magnet.
- Current is led into coil with help of very loose helices which is very thin and made from annealed silver strips

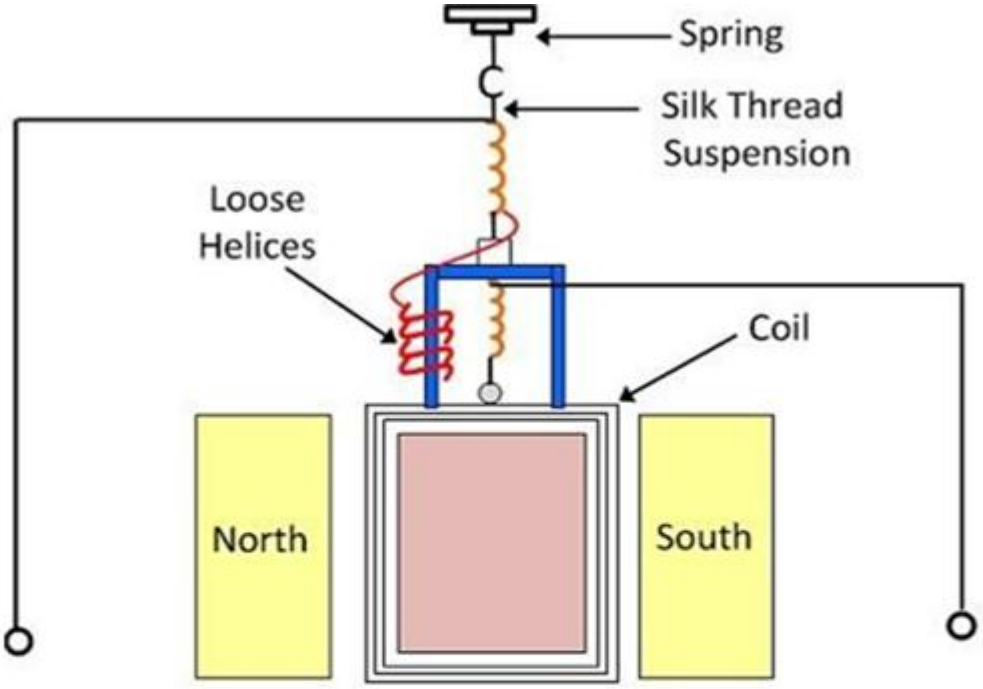


Flux Meter

- The terminals of the flux meter are connected to a search coil.
- The flux linking with the coil is varied by either removing it from the magnetic field or by reversing field of the magnet
- Change of flux induces electromotive force in the coil
  - This emf induces the current in the search coil and sends it through the flux meter
  - Because of the current, the pointer of the flux meter deflects, and deflection is directly proportional to the change in the value of flux linkages

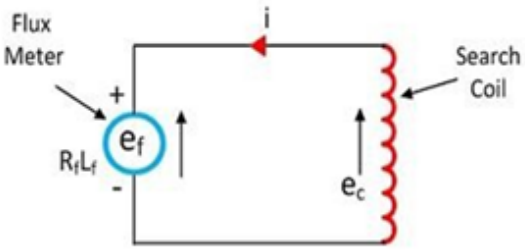


$R_fL_f$ = Resistance and Inductance

$e_c$ = Induced emf of the coil

Flux Meter With Search Coil

$G\theta = N\varphi$ where $\varphi$ = change in flux

$\theta$ = change in flux meter deflection

N = number of turns in search coil

G = displacement constant = NBA=NBld

- **Advantages**
  - The flux meter is portable
  - The scale of the flux meter is directly calibrated in Weber turns
  - The deflection of coil is free from time taken by the flux change
- **Disadvantage**- It is less sensitive and accurate than Ballistic Galvanometer(BG)

| S. No. | Fluxmeter | Ballistic Galvanometer |
|---|---|---|
| 1) | Controlling torque is very small. | Controlling torque is high. |
| 2) | Heavy electromagnetic damping. | Electromagnetic damping is not heavy. |
| 3) | Less sensitive. | More sensitive. |
| 4) | Less accurate. | More accurate. |
| 5) | The deflection is independent of the time taken by the flux changes. | The deflection is dependent on the time taken by the flux changes. |

## MEASUREMENT OF FLUX DENSITY (B)

- A coil known as search coil or B coil with sufficient number of turns is wound on a ring specimen which is connected to a flux meter or BG through resistance and calibrating coil.
- Ring specimen is wound with a magnetizing winding carrying current, I which is reversed using switch
- Thus, change in flux is produced and emf is induced in search coil which sends a current to BG causing deflection.

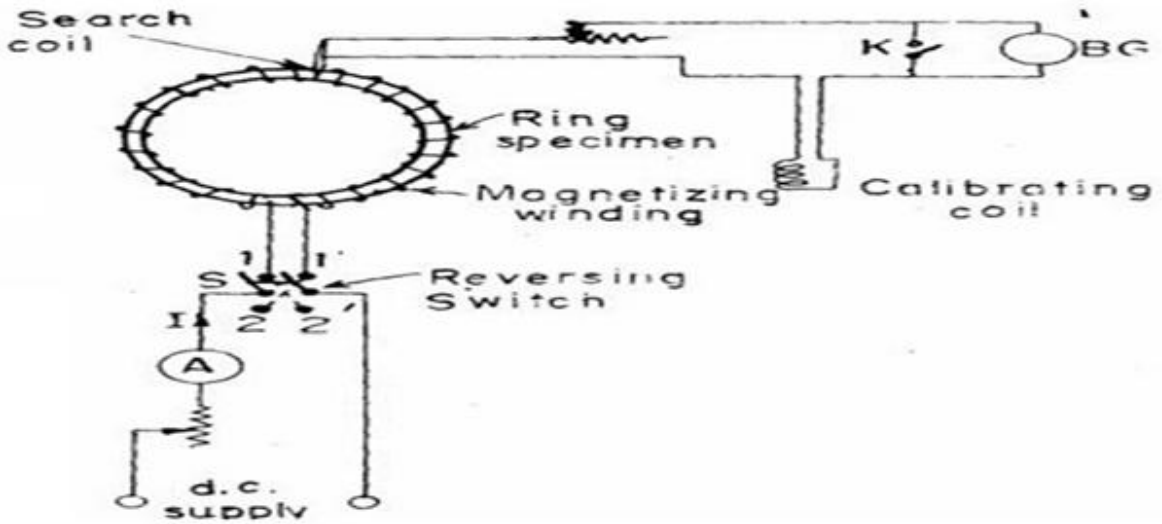

$\Phi$ = flux linking with search coil

N = number of turns of search coil

R= resistance of ballistic galvanometer circuit

t = time required to reverse flux

The average emf induced in the search coil,

$e = N\, d\Phi / dt$ volts

Initial flux = $\Phi$

After reversal = $-\Phi$

$d\Phi = \Phi - (-\Phi) = 2\Phi$

$dt = t$

$$e = \frac{N2\Phi}{t} \text{ volts}$$

Thus average current through BG is $i = \frac{e}{R} = \frac{N2\Phi}{tR}$ ampere

Hence the charge Q discharged through the galvanometer during t sec is,

$$i = \frac{Q}{t}$$

$$\boxed{Q = it = \frac{N2\Phi}{tR}t = \frac{N2\Phi}{R} \text{ Coulombs}}$$

The deflection in the galvanometer α charge discharge through it

$Q \alpha \theta$

$Q = K\theta$

$\frac{N2\Phi}{R} = K\theta$

$$\Phi = \frac{K\theta R}{2N} \text{ Wb}$$

If A = area of cross-section of the specimen, then flux density B=

$$\frac{\varphi}{A} = \frac{K\theta R}{2NA} \text{ Wb/m}^2$$

## Correction of air flux

In the above discussion, it is assumed that the flux is uniform throughout the specimen and area of cross-section of search coil and specimen is equal. But practically cross-section of search coil is higher than that of specimen. Hence total flux linking with the search coil is sum of the flux in the specimen and the flux existing in the air gap between search coil and the specimen.

∴Total flux observed = Flux in specimen + Flux in air gap between coil and specimen

Let $B'$ = Observed value of flux density

$B_t$ = True value of flux density

$A_c$ = Area of cross-section of search coil

$$\therefore \quad B'A = B_t A + \mu_0 H (A_c - A)$$

$$\therefore \quad B_t = B' - \mu_0 H \left[\frac{A_c}{A} - 1\right]$$

## MEASUREMENT OF MAGNETISING FORCE (H)

- Measured by a ballistic galvanometer and a search coil (H coil).
- In this method H cannot be obtained directly, but calculated by measuring flux density by method of current reversal.

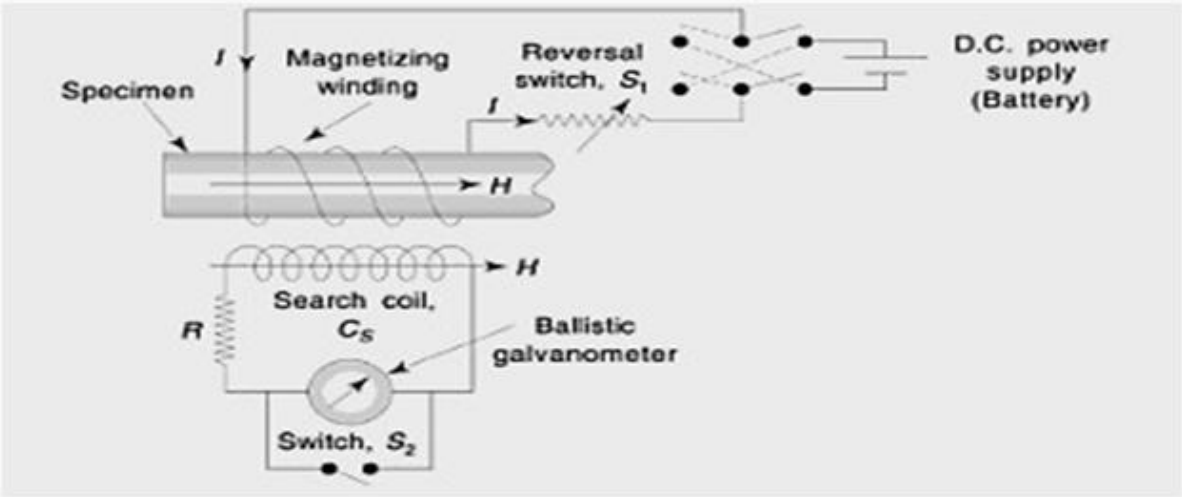


$$H = \frac{B_0}{\mu_0} \qquad \mu_0 = 4\pi * 10^{-7} \text{ H/m} \qquad H = \frac{NI}{l} \text{ AT/m}$$

## DETERMINATION OF B-H CURVE

Two methods - Method of reversals, Step by step method.

### Method of reversals

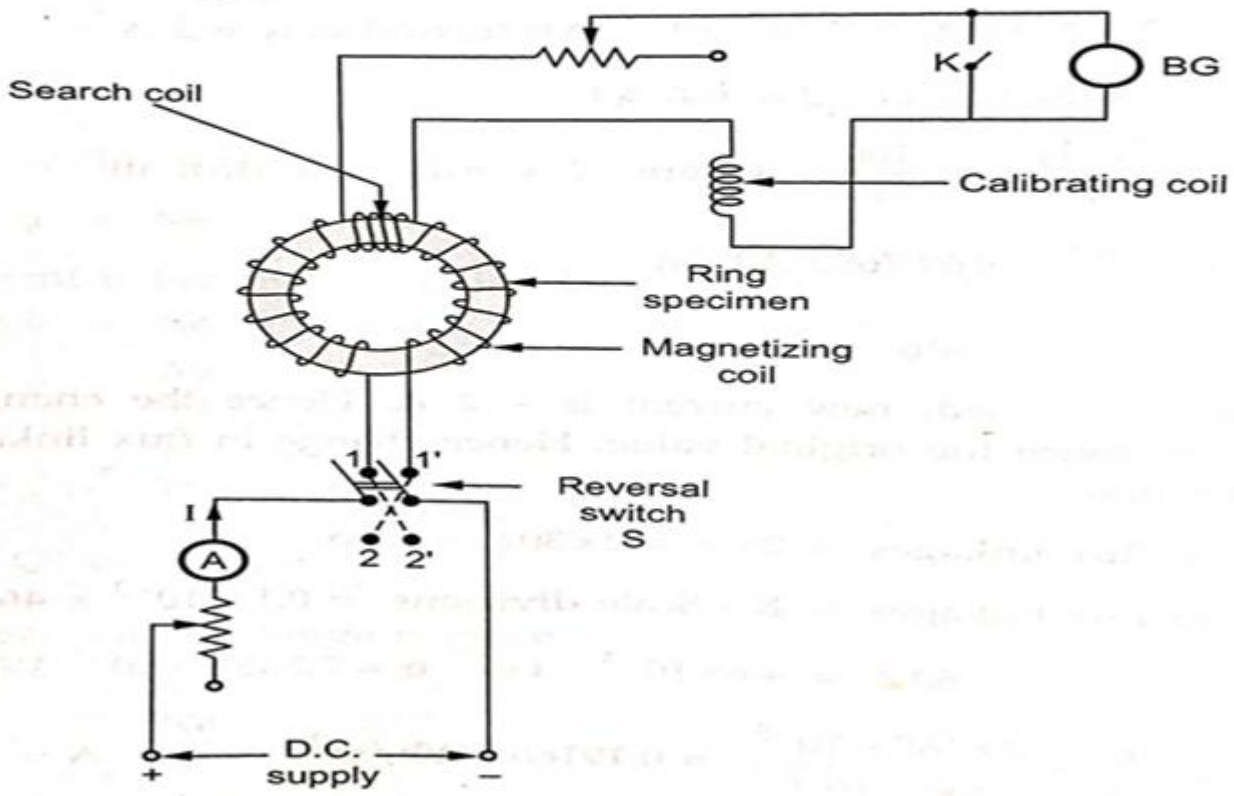


- A ring specimen with known dimensions is taken for test.
- A thin tape is wound on the specimen ring.
- Search coil insulated by paraffin wax is wound over the tape.
- Another layer of tape is wound over the search coil.
- Then magnetizing winding is wound uniformly over tape.

- After demagnetising, the test is started by setting magnetizing current to its lowest value.
- With switch K in closed position, reversing switch is operated about 20 times and it brings the specimen into a reproducible cyclic magnetic state
- Now the switch K is opened and the flux is measured by using the reversal switch and noting throw of BG.
- From this we can calculate the value of $B = \Phi/A$
- This experiment is repeated for different values of H, by changing the value of input current.
- B-H curve is plotted.

**Step by step method**

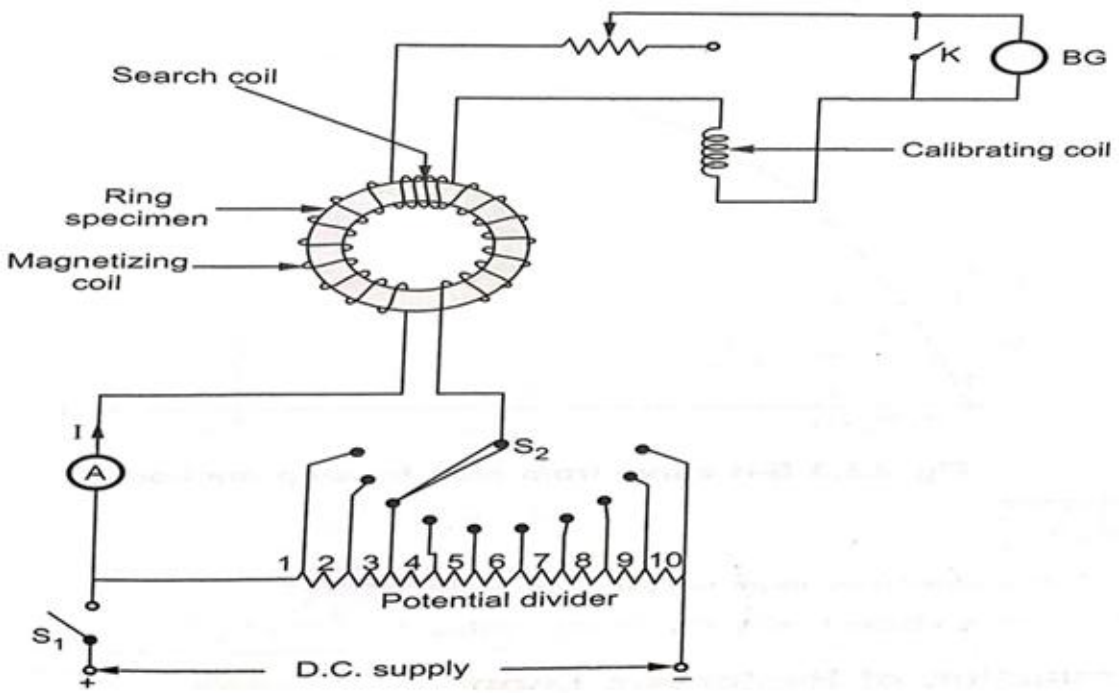


- Magnetizing current is supplied through a potential divider having large number of tappings.
- Tappings are arranged so that H may be increased in suitable number of steps, upto the maximum required value.
- The specimen is demagnetized before test.
- Switch 1 is closed with switch 2 at tapping 1
- Due to this, there will be some change in flux. Hence there will be increase in flux density from 0 to B1 which is observed on the BG. H1 is calculated from value of magnetising current at tapping 1.
- Change to tapping2, repeat same process upto maximum value, and plot B-H curve.

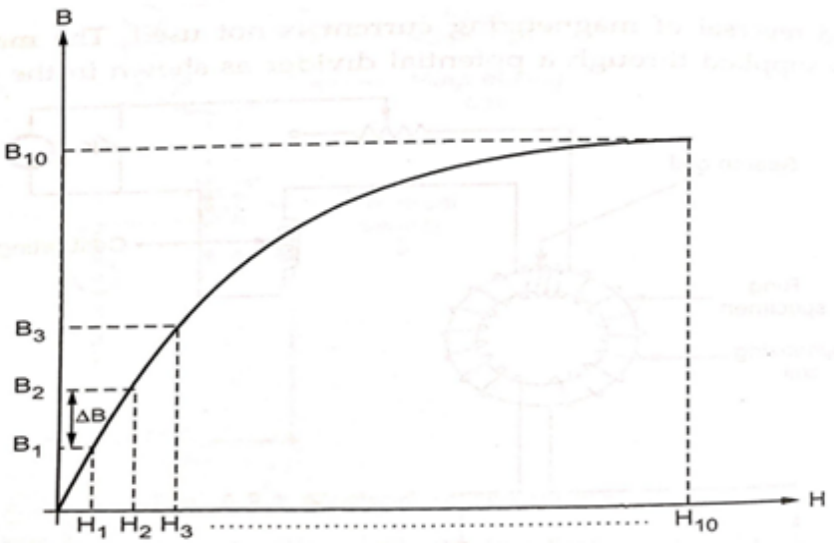

## DETERMINATION OF HYSTERESIS LOOP

- Hysteresis loop of magnetic material indicates the variation of B with respect to H when material is subjected to a cycle of magnetization and demagnetization
- There are two methods for determining:

1. Step by step method
2. Method of reversals

**Step by step method**

- This is the extension of method used for finding B-H curve (procedure is the same )
- In this after reaching the maximum point of H that is S2 at tapping 10, the magnetizing current is reduced in steps to zero by moving S2 own through tapping points 9,8,7,...3,2,1.
- Thus, the material is subjected to cycle of demagnetization.
- Then negative value of H is obtained by reversing the supply to potential divider and moving the switch S2 up again in order 1, 2, 3 ...7, 8,9,10.
- Plotting this B against H for the entire cycle gives hysteresis loop.

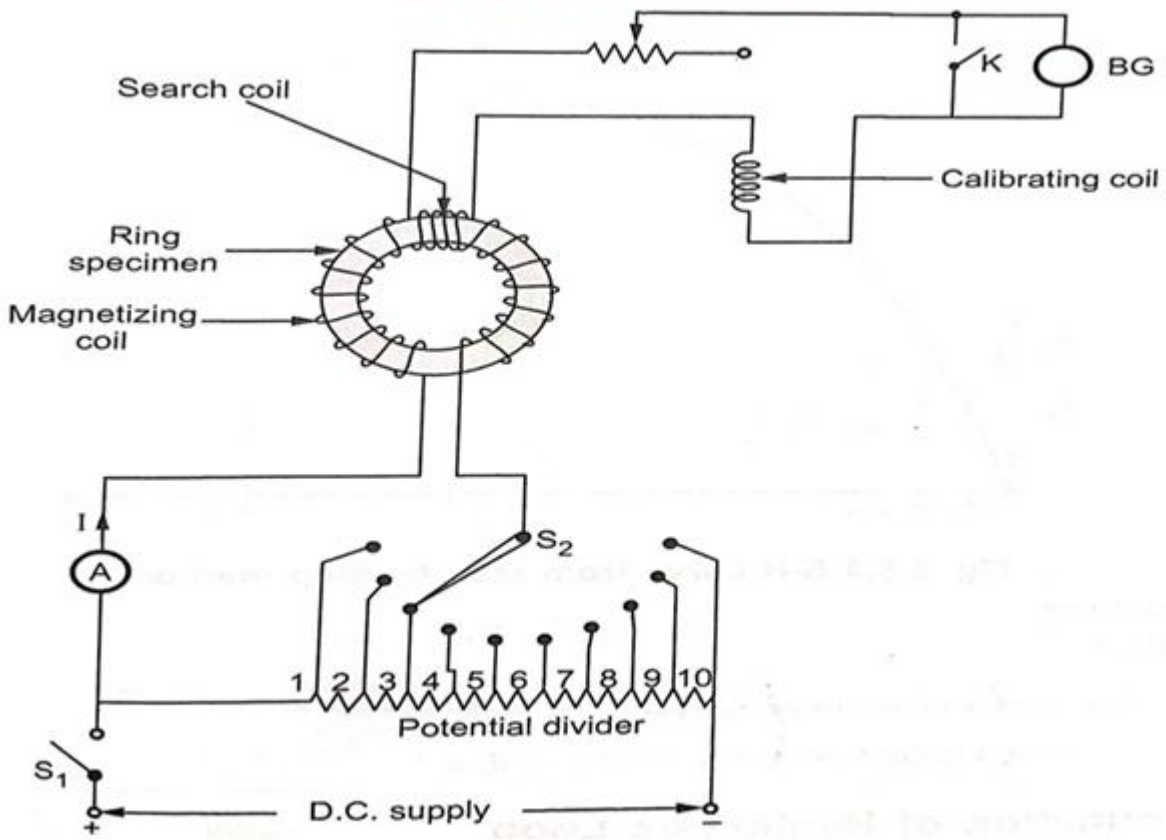

**Method of reversals**

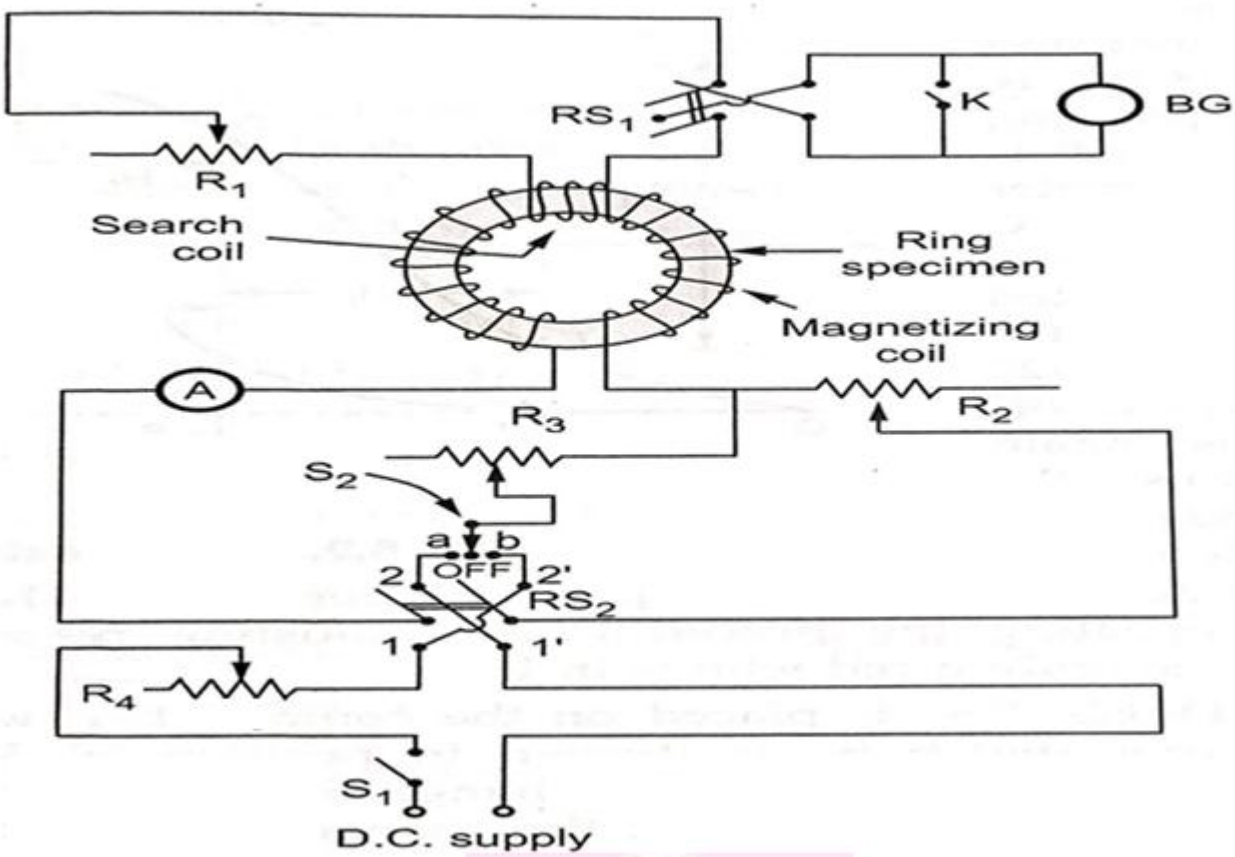


- At each step, change in flux density B measured is the change from Bm to some lower value
- Before the next step, the flux density is brought back to Bm by passing the specimen through remaining cycles
- R1, R2, R4 are used for adjusting resistances in BG and magnetizing circuits. R3 is variable shunting resistance connected across magnetization coil by moving over switch S2. R3 reduces current through the magnetizing coil to any required value.
- The value of Hm for Bm is obtained from previously determined B-H curve.
- R2,R4 are adjusted so that current obtain Hm, with S2 off position
- R1 is then adjusted to get enough deflection of galvanometer when maximum value of magnetizing force is reversed.
- R3 is adjusted to give required reduction in magnetizing current when connected across magnetizing winding.
- Reversing switch RS2 is placed on the contacts 1-1', and BG is connected to the circuit by opening K.
- Since maximum current is flowing in magnetizing winding, the magnetization corresponds to point A in hysteresis loop.
- Now S2 is thrown to position b. Hence, R3 shunts the magnetizing coil, which reduces Hm to Hc.
- Corresponding reduction in flux density shown in BG gives point C.

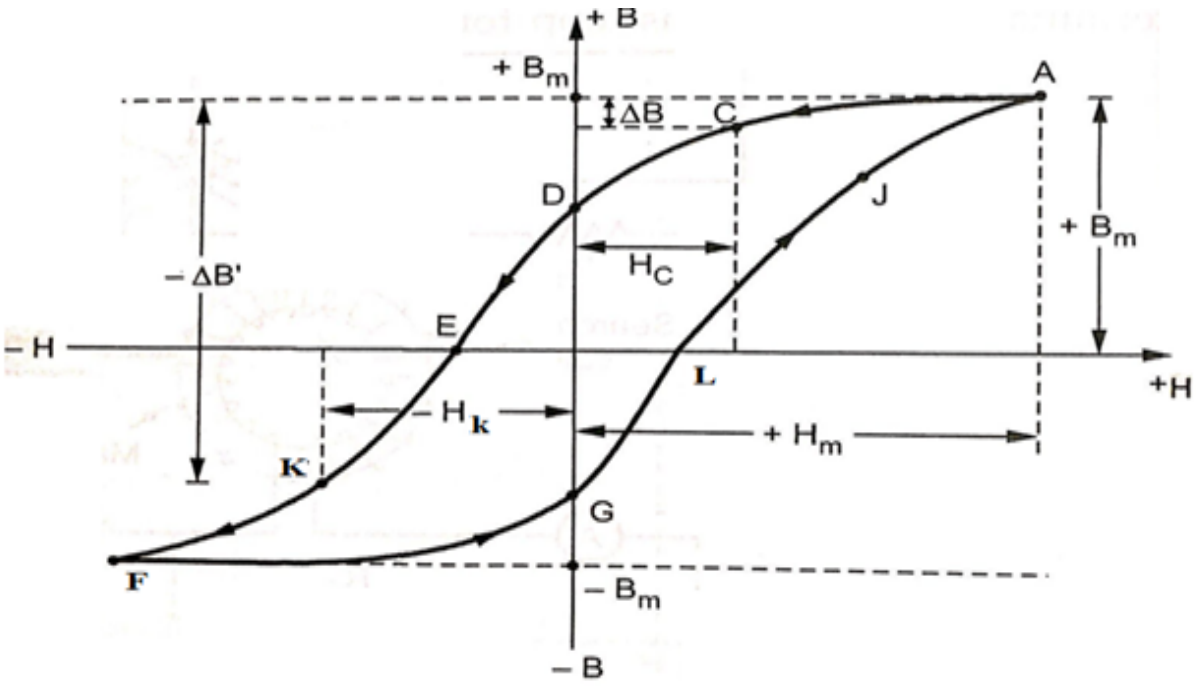


- Galvanometer is shorted using K; RS2 is thrown back to 2-2'.
- Switch S2 is thrown to off state.
- Again RS2 is brought to 1-1'. Thus, a cycle of magnetization and demagnetization is occurred and we get point A.
- Part AD of the loop is obtained by adjusting R3 to get reduced values of B.
- To obtain part DEF, RS2 is placed on 1-1' with K closed and S2 in OFF position

- Now S2 is thrown to position a, K is opened and RS2 to position 2-2'. This brings the magnetizing force to a value $H_k$ in the negative side.
- From the throw of galvanometer - ΔB' can be obtained. The point K is obtained in the loop
- Now again the magnetization is brought back to A by RS2 on 1- 1' with K closed and S2 open.
- Using same procedure, varying R3 gives the entire DEF.
- Thus ADEF in hysteresis loop can be drawn.
- Part FGLA may be obtained by drawing in reverse of part ADEF as two halves are identical.

## PERMEABILITY MEASUREMENT

To design inductors or transformers, value of μ must be known.

- Cross sectional area and magnetic path length of core must be known.
- To measure permeability the coil must be provided with one coil
- The coil must have approximately one turn for every millimetre magnetic path length
- The number of turns N must be counted carefully
- Clean the surfaces of dividable cores very carefully
- The core halves must be clamped straight to each other with a sufficient force

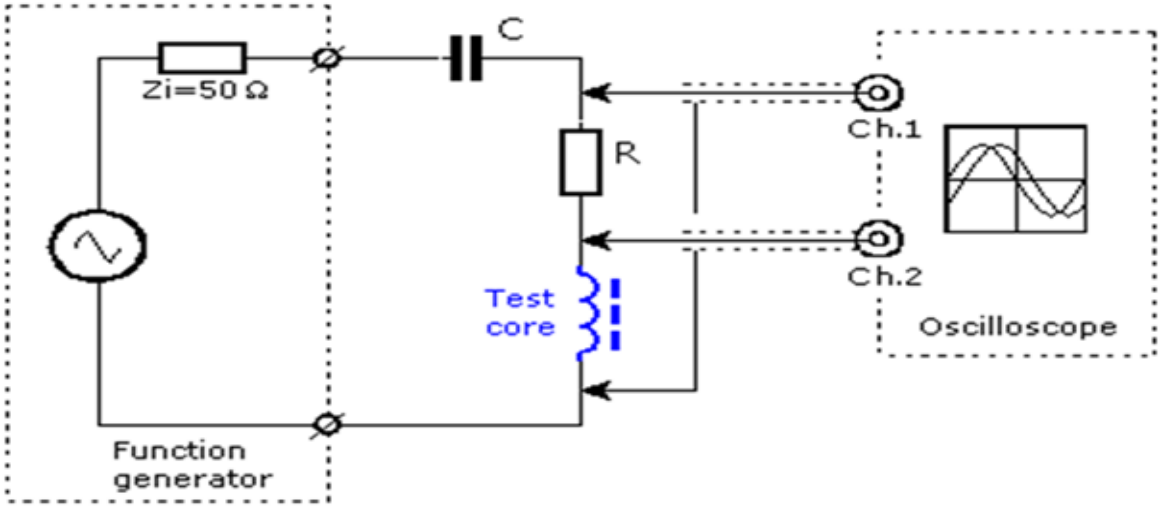


- The capacitor is not most likely necessary. If function generator outputs a signal that holds a DC voltage, it can influence the measurement. Hence, capacitor is required. The value is not very critical but must be large enough to pass the signal without high voltage losses.
- The resistor must have a value that is suitable for measuring the current. The exact value of the resistor *R* must be known for an accurate measurement (10 Ω will do in most cases).
- Set the function generator to output a sine wave with a frequency f between 100 and 1000 Hz.
- Adjust output voltage to a large possible amplitude where there isn't any distortion

- Optionally adjust the frequency so that both the voltage and current can be read with highest possible accuracy
- The oscilloscope shows two signals: the voltage across the inductor $V_L$ and the terminal voltage of the function generator (the voltage across the resistor and inductor) $V_k$
- To obtain the voltage across the resistor $V_R$, these two signals must be subtracted by the oscilloscope which will result in a third waveform that corresponds to the voltage across the resistor R: $v_R(t) = v_k(t) - v_L(t)$
- With the effective resistor voltage, the inductor current $I_L$ can be determined:

$$I_L := \frac{V_R}{R}$$

- From this the absolute permeability is calculated:

$$\mu_C = \frac{V_L l_C}{2\pi f N^2 A_c I_L}$$

- The last step is to calculate the relative permeability: $\mu_r = \mu_c / \mu_0$ where the permeability of vacuum $\mu_0 = 4 \times \pi \times 10^{-7}$ H/m

## ALTERNATING CURRENT MAGNETIC TESTING

- When a magnetic material is subjected to an alternating field, loss in power occurs owing to hysteresis and eddy current losses. This loss is called iron or core loss.
- This testing is done to determine the iron losses in magnetic materials at different values of flux density and frequency and to separate the two components of iron losses.

### IRON LOSS

#### Hysteresis loss

- Energy loss due to hysteresis in per unit volume is the area of hysteresis loop of that material.
- Hysteresis loss per unit volume=frequency x area of hysteresis loop.

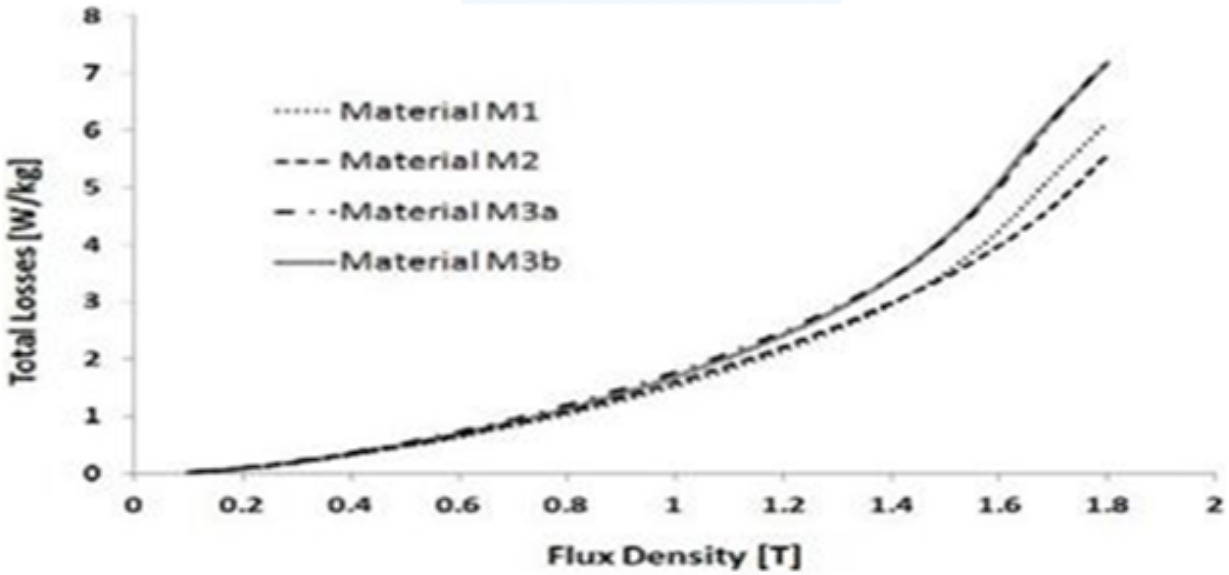


Total iron losses as a function of the flux density at 60 Hz.

- Steinmetz formula for hysteresis loss:

Hysteresis loss per unit volume =

$$P_h = \eta f B_m^k \quad \text{watts/m}^3$$

where $\eta$ = Hysteresis coefficient

$f$ = Frequency

$B_m$ = Maximum flux density

$K$ = Steinmetz coefficient varies between 1.6 to 2

Practically K is taken as 1.67.

For a given specimen of thickness t and certain volume, it is given by,

$$\boxed{P_h = K_h f B_m^{1.67} \quad W}$$

where $K_h$ = Hysteresis loss constant

## Eddy current loss

The eddy current loss per unit volume for given lamination is given by,

$$P_e = \frac{4 K_f^2 f^2 B_m^2 t^2}{3\rho} \quad \text{watts/m}^3$$

where $K_f$ = Form factor of alternating supply used.

$t$ = Thickness of lamination

$\rho$ = Resistivity of material in Ω-m

For a given volume, thickness and resistivity of the material, the loss is expressed as,

$$\boxed{P_e = K_e K_f^2 f^2 B_m^2 \quad W}$$

where $K_e$ = Eddy current loss constant

$$\therefore \quad \boxed{P_i = P_h + P_e = \text{Total iron loss}}$$

## Separation of iron losses

As both losses have different laws of variation with frequency f and form factor Kf, it is possible to separate the losses by variation of frequency or of form factor, if Bm is maintained constant.

### 1. Variation of Frequency

Maintaining Kf and Bm constant

$$P_i = K_1 f + K_2 f^2$$

$$K_1 = K_h B_m^k$$

$$K_2 = K_e K_f^2 B_m^2$$

Both $K_1$ and $K_2$ being constant for this test

$$\frac{P}{f} = K_1 + K_2 f.$$

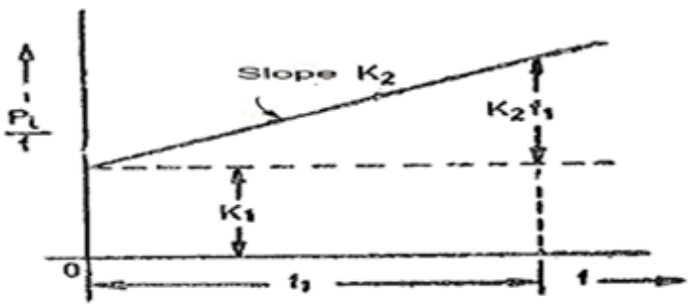


Variation of iron loss with frequency.

**2. Variation of Form factor**

- Maintaining f and Bm constant

$$P_i = K_3 + K_4 K_f^2$$

$$K_3 = K_h f B_m^k$$

$$K_4 = K_e f^2 B_m^2$$

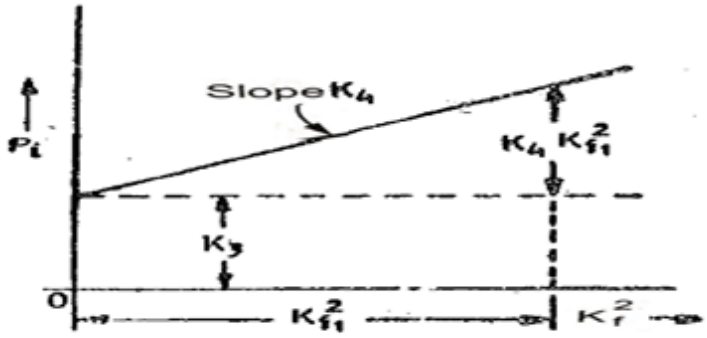

Variation of iron loss with $K_f^2$

**METHODS OF MEASUREMENT OF IRON LOSSES**

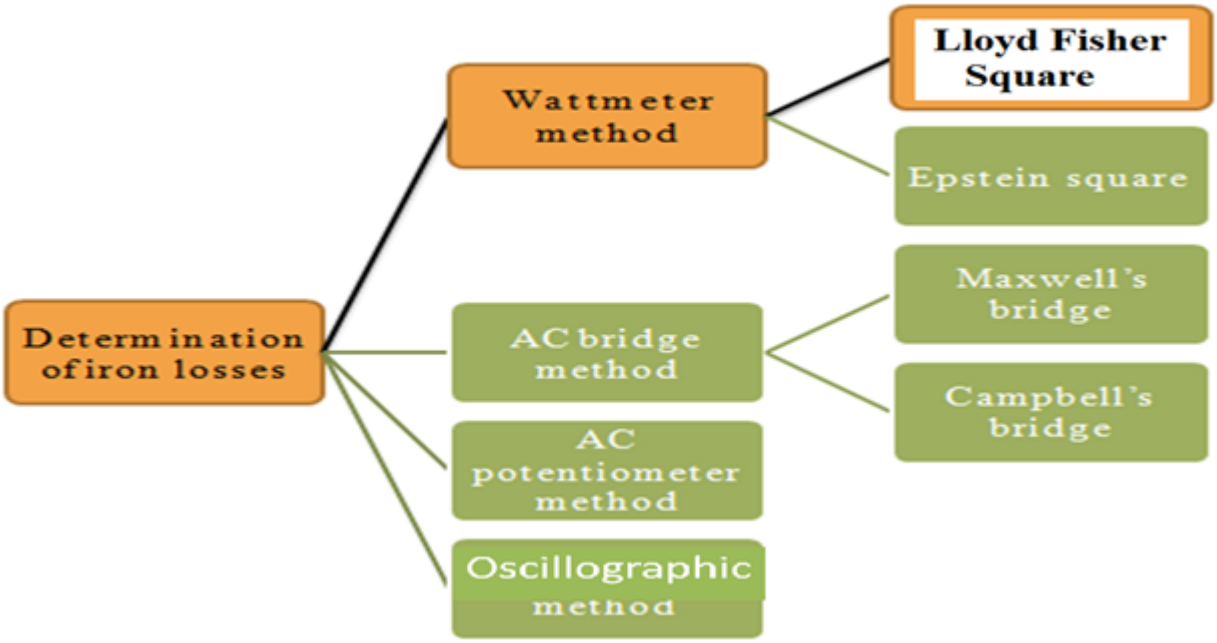


**WATTMETER METHOD**

- Most commonly used method.
- The strip (sheet) material to be tested is assembled as a closed magnetic circuit in the form of a square. Therefore, this arrangement is known as magnetic square. There are two common forms of magnetic squares.

**Epstein square**

- There are four stacks of strips, which are bound and then taped.
- Strips are insulated from each other and are in the plane of the square.
- Stacks are slipped into four magnetising coils with strips projecting beyond coils.
- The ends of four strips are interleaved and clamped at corners.

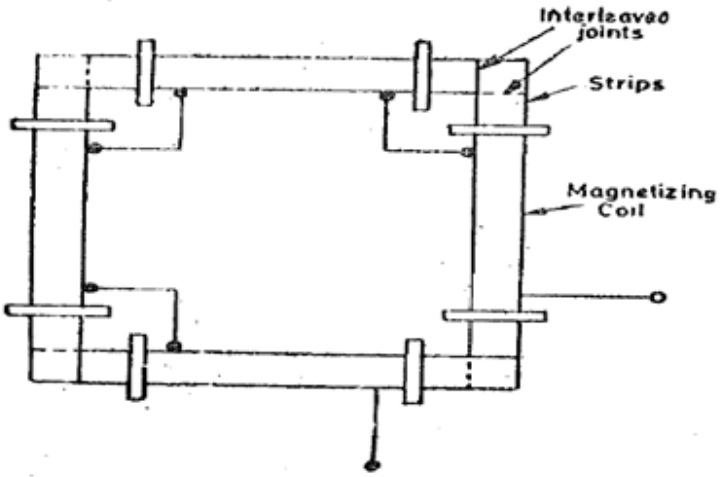


## LLOYD - FISHER SQUARE

- Most commonly used magnetic square.
- Strips (0.25m long and 50 to 60 mm wide) are built up into four stacks. Two types of strips in each stacks -one cut in the direction of rolling and other cut perpendicular to the direction of rolling.
- Stacks are placed inside 4 similar magnetising coils of large cross sectional area. These 4 coils are connected in series to form primary winding
- Below each magnetizing coil, there are two similar single layer coils called secondary coils. Magnetic Square has eight secondary coils. These coils are connected in series in groups of four, one from each core, to form two separate secondary windings.
- Ends of strips project beyond the coils.
- Strips are arranged such that plane of each strip is perpendicular to plane of square.
- Magnetic circuit is completed by bringing 4 stacks together in form of square and joining them at corners.
- Corner joints are made by a set of standard right-angled corner pieces of same material as strips or at least a material having same magnetic properties.
- The corner pieces and strips are overlapped at corners due to which cross-section of iron is doubled at corners. Hence, correction must be applied for this.

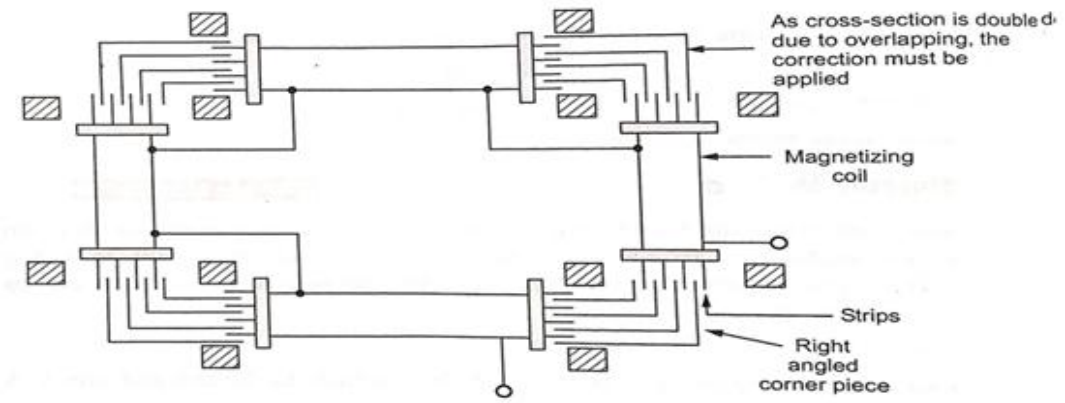

**Measurement setup**

- Weight and cross-section of specimen is determined before test.
- The four magnetizing coils are connected in series to form primary winding, which is connected to sinusoidal voltage supply through transformer secondary and current coil of wattmeter.
- Pressure coil is connected to one of the secondary winding. The other secondary winding is connected to electrostatic voltmeter.
- Frequency of supply is adjusted to correct value.
- Supply voltage is adjusted using variable ratio transformer until the magnetising current is adjusted to give the required value of Bm.
- The voltmeter and wattmeter readings are noted.

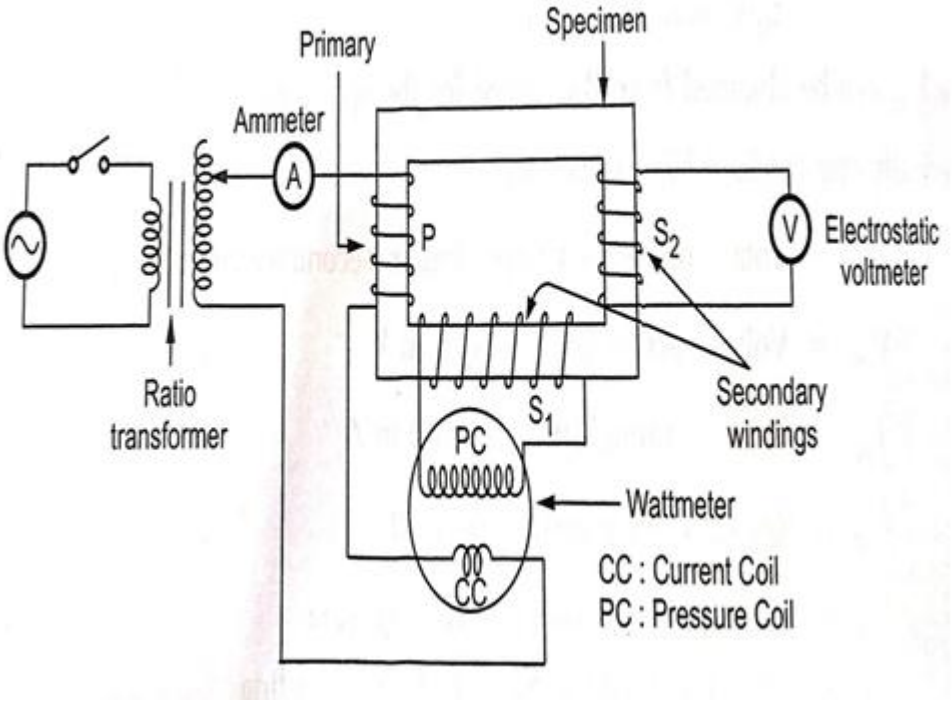


The voltage measured by voltmeter is given by,

$$E = 4 K_f (B'_m A_s) f N_2 \quad ; \quad \phi_m = B'_m A_s$$

where $K_f$ = Form factor = 1.11 for sinusoidal flux

$B'_m$ = Apparent value of maximum flux density in $Wb/m^2$

$A_s$ = Cross-sectional area of specimen in $m^2$

$N_2$ = Number of turns in the winding $S_2$

$f$ = Frequency in Hz

$$\therefore \quad \boxed{B'_m = \frac{E}{4 K_f A_s f N_2}}$$

The correction is required for this value of flux density as $S_2$ encloses the flux in air gap between specimen and the coil, in addition to the flux in the specimen.

$$\therefore \quad \boxed{B_m = B'_m - \mu_0 H_m \left[\frac{A_c}{A_s} - 1\right]}$$

where $B_m$ = Maximum flux density required

$A_c$ = Cross-section of coil in $m^2$, $A_s$ = Cross-section and specimen in $m^2$

$H_m$ = Magnetizing force required to develop maximum flux density in A/m

The $H_m$ can be obtained from B-H curve for the specimen.

The wattmeter reading (W) consists of,

W = Total iron loss + Copper loss in secondary circuit

Let $V_{pc}$ = Voltage across pressure coil in V

$I_{pc}$ = Current through pressure coil in A

$r_p$ = Resistance of pressure coil in Ω

$r_s$ = Resistance of secondary winding in Ω

E = Voltage induced in $S_2$ = Voltmeter reading

The voltage induced in $S_1$ is same as $S_2$ as the number of turns are same.

∴ Voltage induced in $S_1$ = E

Neglecting leakage reactance of $S_1$ and leakage reactance of pressure coil as it is highly resistive,

$$E = I_{pc} r_p + I_{pc} r_s = I_{pc}(r_p + r_s)$$

While $$V = I_{pc} r_p$$

∴ Total iron loss ($P_i$) in specimen + Total copper loss in secondary circuit

$$= \frac{WE}{V}$$

Total copper loss in secondary circuit $= I_{pc}^2 (r_p + r_s) = \dfrac{E^2}{(r_p + r_s)}$

$$\therefore \quad P_i = \frac{WE}{V} - \frac{E^2}{(r_p + r_s)} = \frac{W I_{pc}(r_p + r_s)}{I_{pc} r_p} - \frac{E^2}{r_p + r_s}$$

$$\therefore \quad \boxed{P_i = W\left[1 + \frac{r_s}{r_p}\right] - \frac{E^2}{r_p + r_s} \text{ watts}}$$

By conducting test at different frequencies iron loss can be separated into hysteresis and eddy current loss.

## MEASUREMENT OF LUMINOUS INTENSITY

- Photoelectric effect was discovered by Heinrich Hertz.
- When light, UV rays, X rays or gamma rays fall on certain materials; they start instantaneous ejection of electrons. This phenomenon is called photoelectric effect.
- Photoelectric transducer converts light beam into usable electric signal.
- Depending on the way photoelectric effect is recognized, photoelectric devices are classified as:
  1. Photo emissive cells
  2. Photoconductive (Photo resistive) cells or
  3. Photovoltaic cells

## PHOTOCONDUCTIVE TRANSDUCERS

- The electrical resistivity of certain materials changes when exposed to light and they are known as photo resistive (or photoconductive) materials or light dependent resistors (LDR).
- In semiconductors when light falls, charge carriers are released increasing the current flow with decrease in resistance at constant applied voltage.
- This effect is noticeable in selenium, silicon and germanium.
- Compounds like lead sulphide, activated polycrystalline cadmium sulphide, cadmium selenide and cadmium sulpho selenide are commonly used for photoconductive cells.
- Higher intensity of light results in lowering of resistance.

- Photoconductive cell consists of a deposit of photoconductive material on ceramic substrate.
- Electrodes of tin or indium or gold are embedded on photoconductive material by evaporation in an interdigitating pattern (in form of interlocked fingers or combs).
- Electrodes make ohmic contact with deposit and enable measurement of resistance of cell.
- Cell resistance depends on properties of photoconductive layer, dimensions of cell and electrode configuration.
- Measurement of resistance of cell is made using dc bridge and potentiometer circuits.

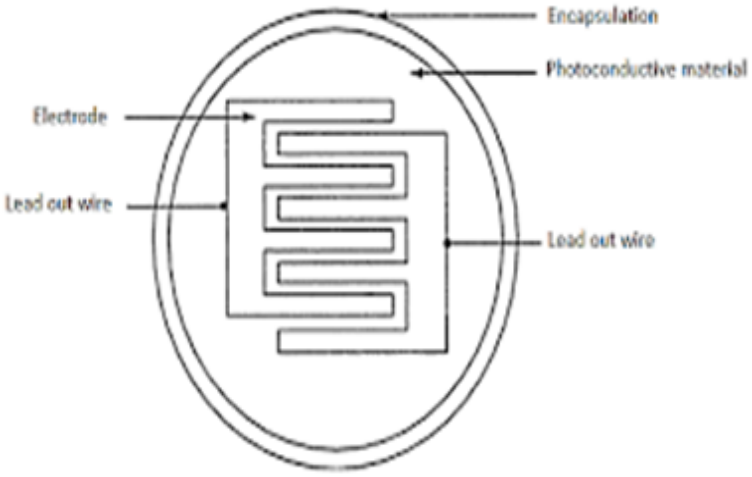


Photoconductive Transducer

- A dc voltage is applied across series combination of cell and a small resistor whose value is kept much smaller than the lowest possible value of cell under maximum illumination.
- Voltage drop across small resistor is measured on dc potentiometer.
- When radiation falling on cell is chopped mechanically, voltage drop is amplified by ac amplifiers.
- Temperature has no influence on performance and sensitivity of photoconductive cell as long as illumination level is not low. For lower temperature, temperature compensation is needed.
- When cell is kept in darkness, its resistance is called dark resistance, which may be as high as $10 \times 10^{12}\ \Omega$.

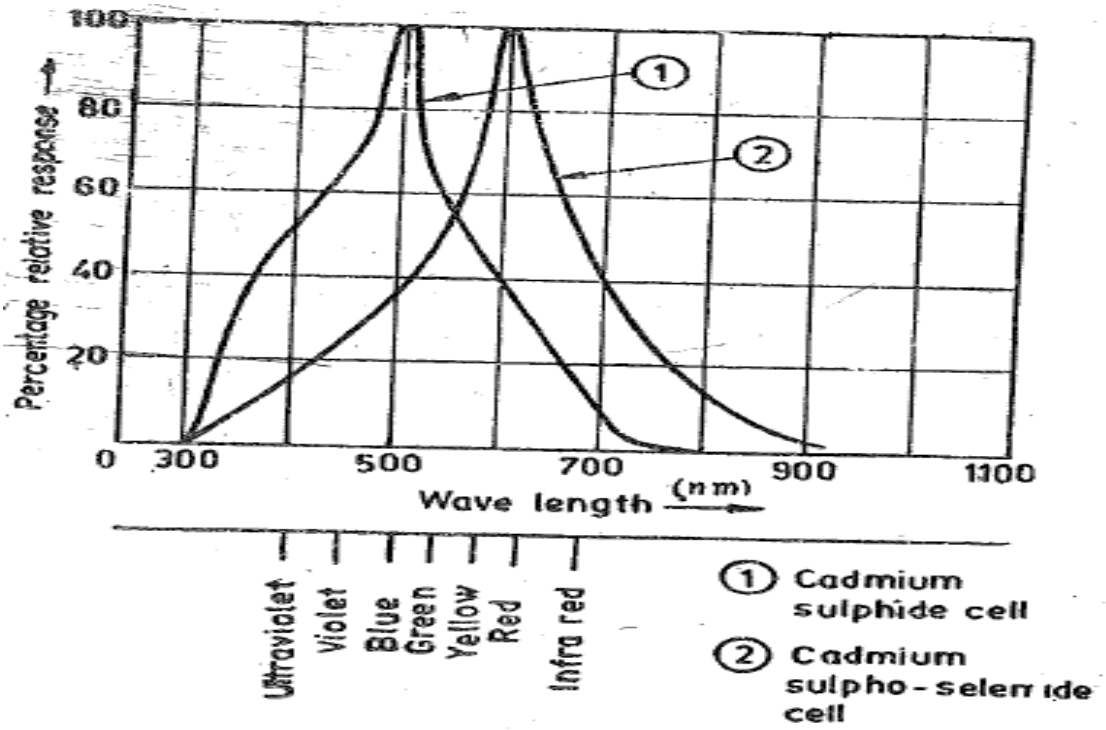


Spectral response characteristics of photoconductive cells.

## PHOTOVOLTAIC CELLS

- Photovoltaic cell generates a voltage, which is proportional to electromagnetic radiation intensity. Hence, photovoltaic cell.
- They are active transducers.
- Photons striking the cell pass through thin p doped upper layer and are absorbed by electrons in lower n layer causing formation of conduction electrons and holes. Depletion zone potential of pn junction then separates these conduction holes and electrons causing a potential difference across the junction.
- All photovoltaic cells have low but finite internal resistance.
- When connected in a circuit having some load resistance, a current will flow.
- Materials used for making photovoltaic cell are Silicon, Selenium, Germanium, Indium Arsenide, Indium Antimonide etc.
- Solar cells based on this principle, are used in spacecrafts to supply electrical power.

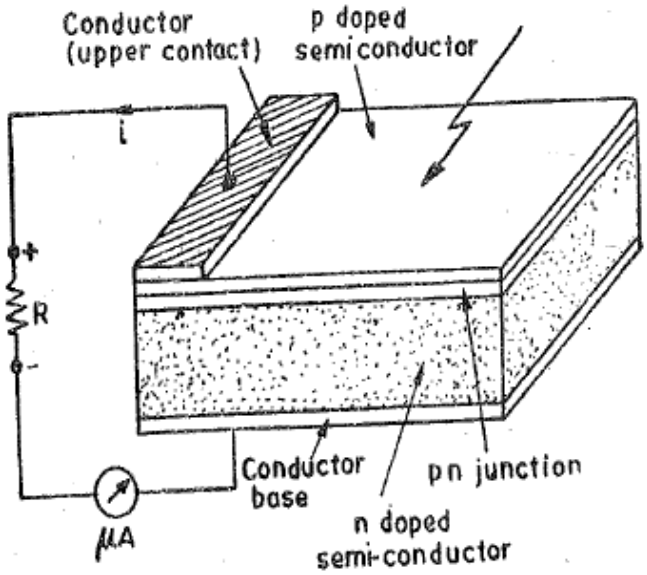


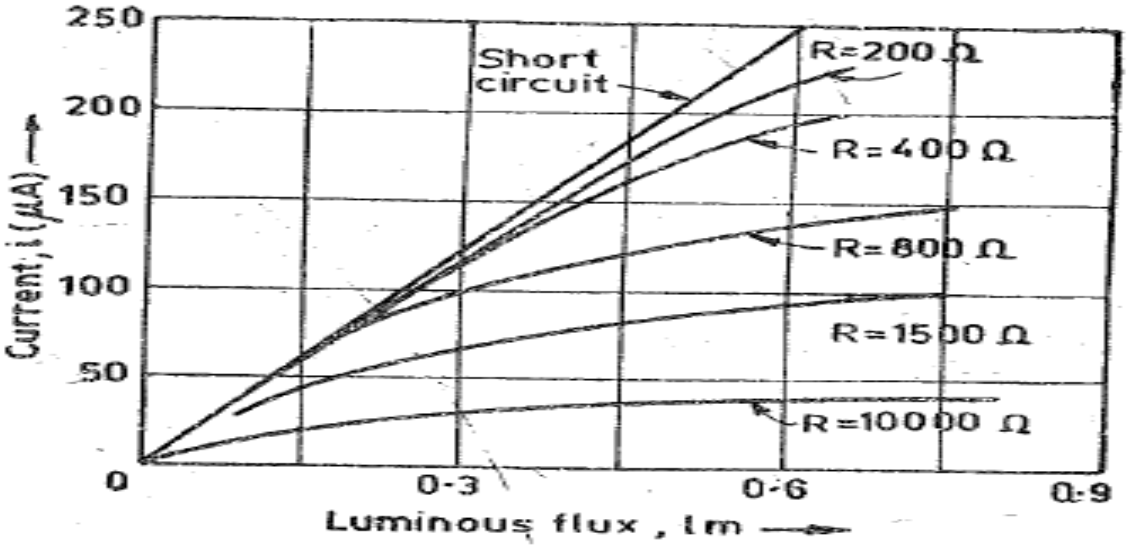


Current versus luminous flux characteristics for a photovoltaic cell.

## RESISTANCE THERMOMETERS

- Resistance thermometer uses change in resistance of conductor to determine temperature.

$$R = R_0(1 + \alpha_1 T + \alpha_2 T^2 + \cdots + \alpha_n T^n + \cdots)$$ where $R_0$ = resistance at temperature $T = 0^0$K

- All metals produce positive change in resistance with temperature.
- It is also known as RTD (Resistance Temperature Detector).
- Platinum is used in high accuracy RTD as it can withstand high temperatures while maintaining stability. As a noble metal, it shows limited susceptibility to contamination.
- Gold and silver is not used for RTD due to their low resistivities.
- Tungsten has high resistivity, but is reserved for high temperature applications, as it is brittle and difficult to work.

- Copper is used on account of its low linearity and low cost, but its low resistivity forces the element to be longer than platinum.
- Common RTDs are made of either platinum, nickel or nickel alloys. Nickel is non- linear and tends to drift with time.

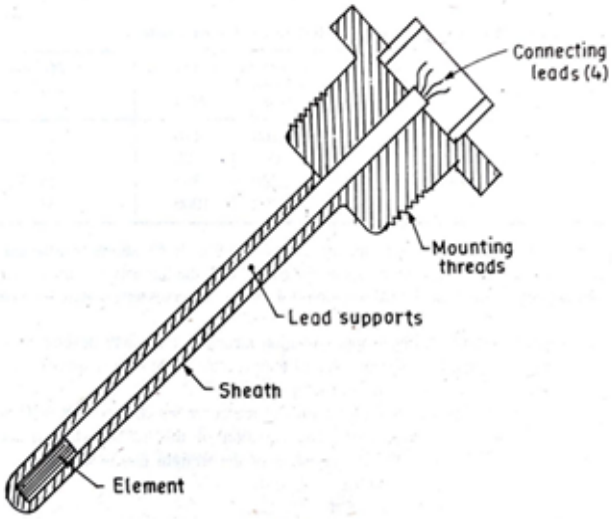


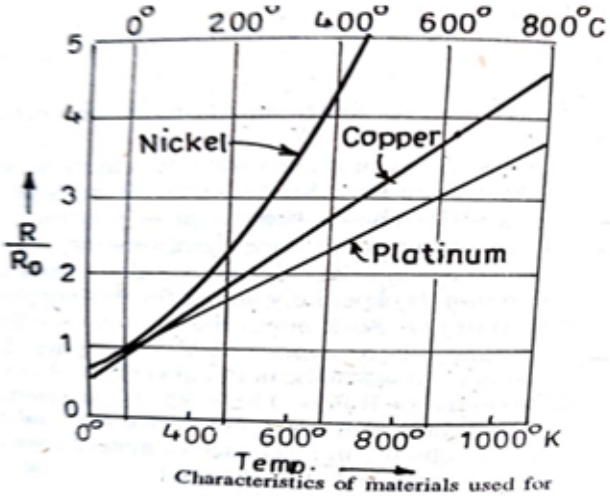


Characteristics of materials used for resistance thermometers.

Requirements of conductor material to be used in RTD:

1. The change in resistance of material per unit change in temperature should be as large as possible.
2. The material should have high value of resistivity so that minimum volume of material is used in its construction.
3. Resistance of materials should have a continuous and stable relationship with temperature.

For measurement, resistance element is connected to Wheatstone bridge.

Linear Approximation

We can develop an equation for straight line over specified span of resistance versus temperature curve.

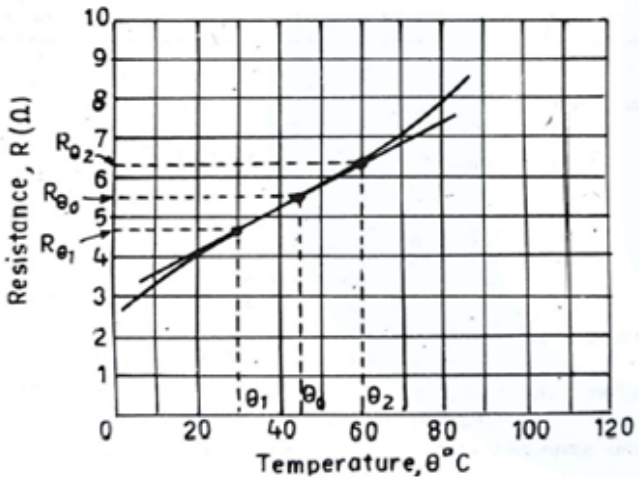


$$R_\theta = R_{\theta_0}(1 + \alpha_{\theta_0}\Delta\theta)$$

$$\Delta\theta = \theta - \theta_0$$

$$\alpha_{\theta_0} = \frac{1}{R_{\theta_0}} \times \text{slope at } \theta_0$$

Quadratic Approximation

- More accurate representation.
- Includes both a linear term and a term, which varies as the square of the difference of temperature.

$$R_\theta = R_{\theta_0}[1 + \alpha_1 \Delta\theta + \alpha_2 (\Delta\theta)^2]$$

## THERMISTORS

- Also known as thermal resistors.
- They are composed of semiconductor materials.
- They have very high negative temperature coefficient of resistance meaning that resistance decreases with increase in temperature.
- They have high sensitivity and hence detect even very small changes in temperature which cannot be observed using RTD.
- Hence useful for precision temperature measurements.
- They exhibit highly non-linear characteristics.
- Relationship between resistance and absolute temperature is:

$$R_{T1} = R_{T2} \exp[\beta(\frac{1}{T_1} - \frac{1}{T_2})]$$

where $R_{T1}$ is resistance of thermistor at absolute temp. $T_1^0 K$
$R_{T2}$ is resistance of thermistor at absolute temp. $T_2^0 K$
$\beta$ is constant depending on thermistor material

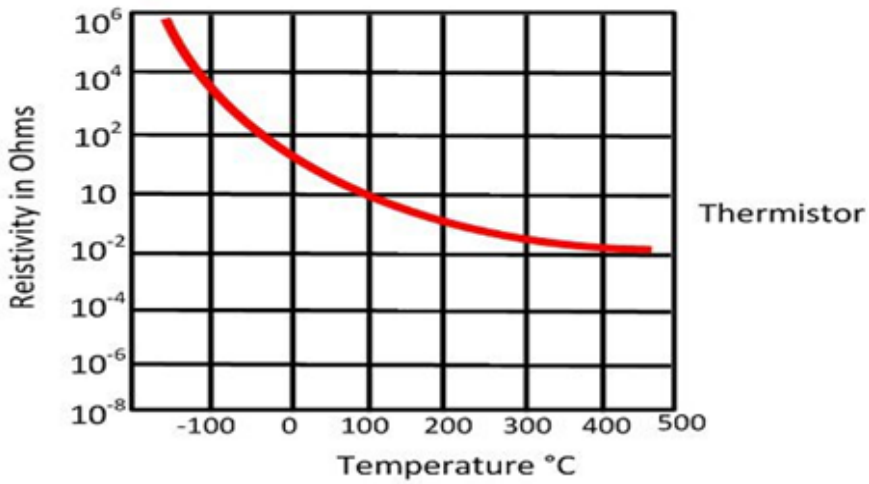


Resistance Temperature Characteristic

- Thermistors are composed of sintered mixture of metallic oxides such as manganese, nickel, cobalt, copper, iron and uranium.
- They are available in the form of beads, probes, rods and discs.

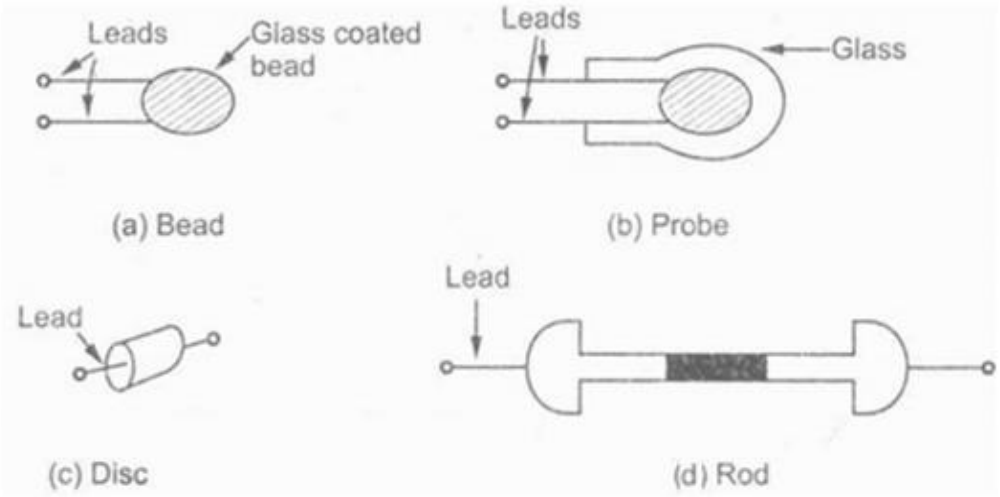


## APPLICATIONS OF THERMISTORS

1. Measurement of temperature

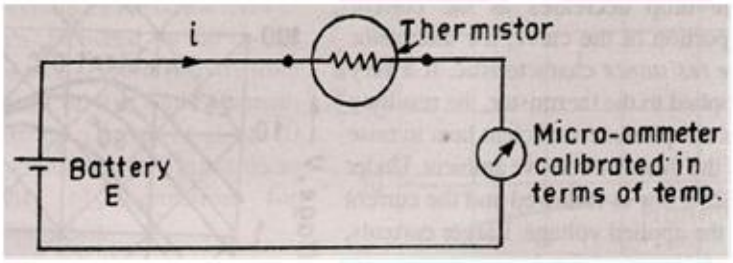


When a thermistor is connected in a series circuit consisting of a battery and micro- ammeter, any change in temperature causes a change in resistance of thermistor and corresponding change in the circuit current. The micro- ammeter may be directly calibrated in terms of temperature.

2. Control of temperature

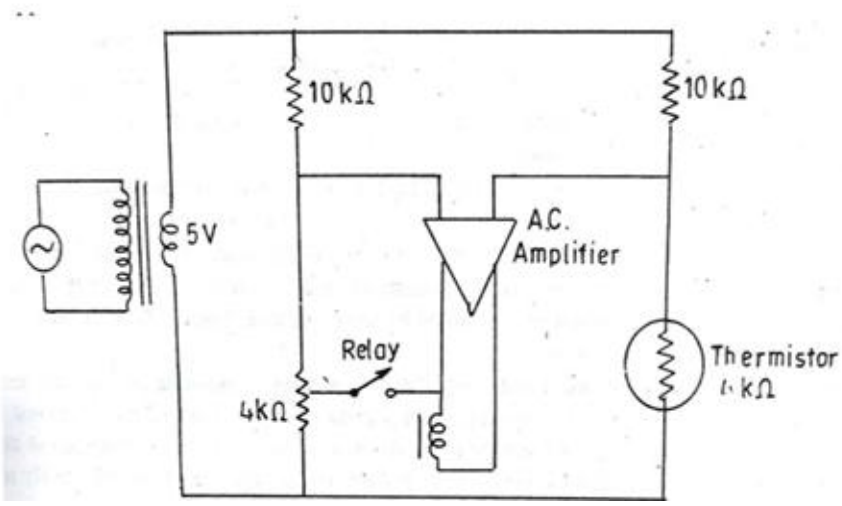

Thermistor connected in an ac-excited bridge. The unbalance voltage is fed to an ac amplifier whose output excites a relay coil. The relay contacts are used to control the current in the circuit, which generates the heat.

3. Temperature compensation

Thermistor shunted by a resistor is connected with copper coil such that the total resistance is constant over a wide temperature range.

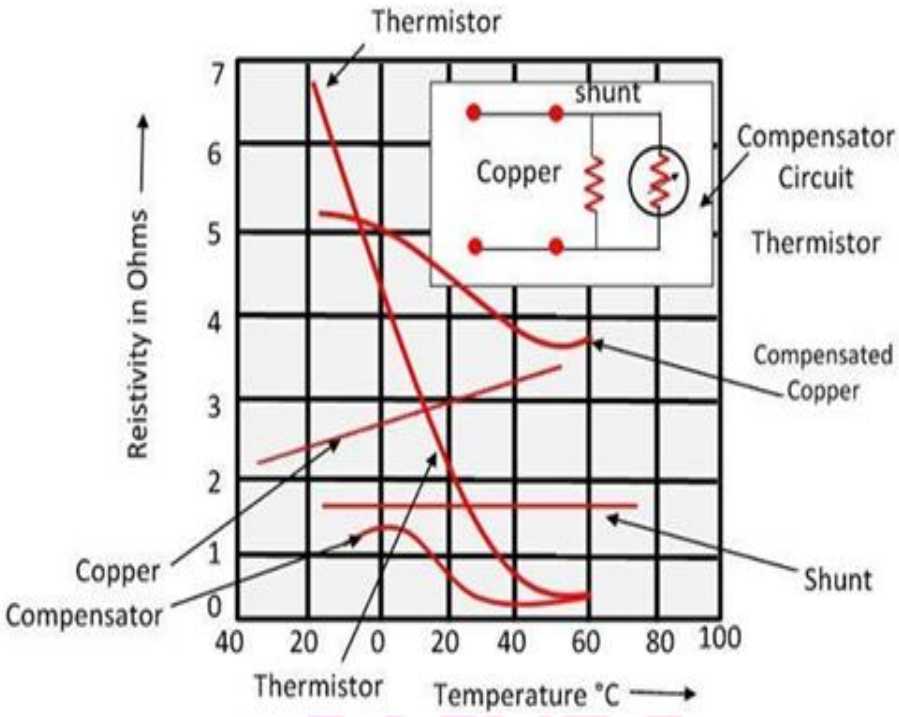


Other applications are:

i. Measurement of power at high frequencies

ii. Measurement of thermal conductivity

iii. Measurement of level, flow and pressure of liquids

iv. Measurement of composition of gases

v. Vacuum measurements and

vi. Providing time delay.

## THERMOELECTRIC TRANSDUCER

- **Thermocouple** is a thermoelectric device that converts thermal energy into emf, which is electrical form.
- Behaviour of thermocouple is governed by Seebeck effect, Peltier effect and Thomson effect.
- Seebeck effect: The phenomenon of production of thermoelectric emf in a thermocouple due to difference of temperature at its two junctions.
- When two dissimilar metals are joined to form a closed circuit and junctions are at different temperatures, emf is developed, then current flows. This emf is thermoemf and this arrangement is thermocouple.
- Peltier effect: Liberation or absorption of heat at junctions of thermocouple due to passage of electric current. If junctions of thermocouple are kept at same temperature and if current are allowed to pass through, then one junction gets heated and other gets cooled.
- Thomson effect: When two parts of a single conductor are at different temperature, an emf is developed between them.
- Deflection of instrument is directly proportional to emf and can be calibrated to read temperature.
- Simplest and common method of measuring temperatures.

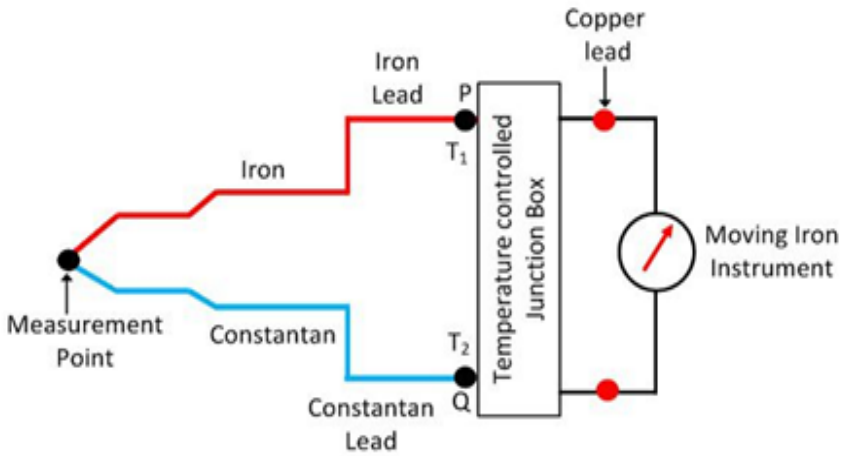


Iron Constonant Thermocouple

- Emf, $E = a\Delta\theta + b(\Delta\theta)^2$ where $\Delta\theta$ is temperature difference between hot and cold junctions in $^0c$, a and b are constants whose values depend upon metals used.

- For linear relationship, $E \approx a\Delta\theta$.
- Temperature of reference junction should remain constant.
- The reference (cold) junction temperature is kept usually at $0^0C$.
- Hot (detecting) junction is at unknown temperature to be measured.
- Thermocouples are active transducers while RTD and thermistors are passive transducers.

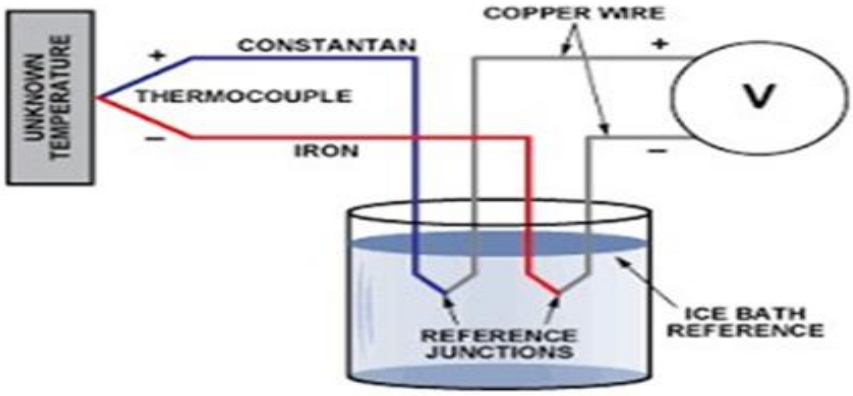


## CHARACTERISTICS OF THERMOCOUPLE

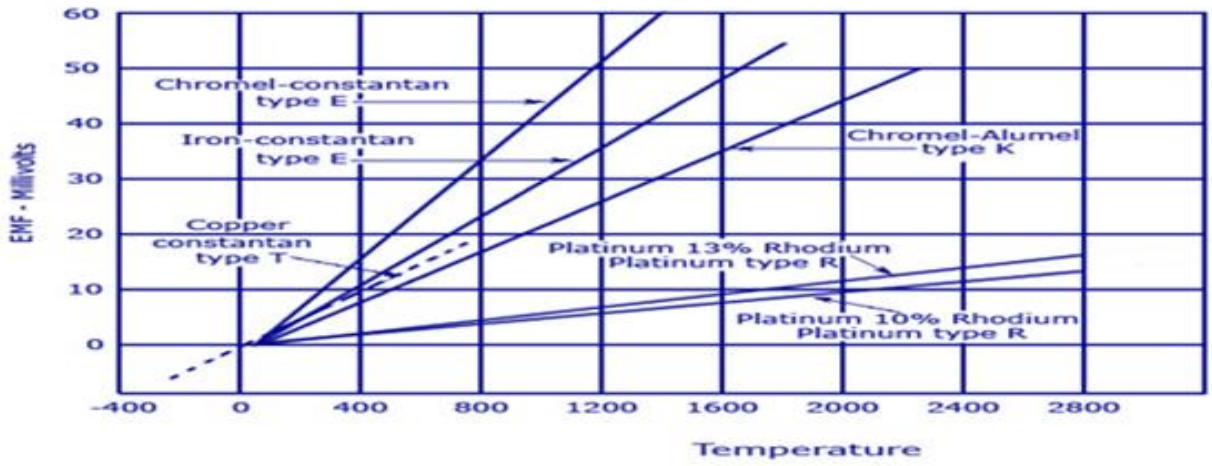


## SILICON TEMPERATURE SENSORS

- Silicon temperature sensors differ from others in operating temperature range and functionality. Its range is -55°C to +150°C.
- Silicon sensors are linear, accurate, low-cost and can be integrated on same IC as amplifiers and other required processing functions.
- Actual sensing element is a simple P-N transistor junction. Voltage across regular P-N transistor junction has an inherent temperature dependency of 2mV/°C, which is used to develop temperature-measuring system. There is no need to add compensation circuits.
- Some sensor ICs are analog circuits with either voltage or current output. Others combine analog circuits with voltage comparators to provide alert functions. Some other combine analog circuitry with digital input/output and control registers, making them an ideal solution for microprocessor-based systems.

# MODULE – 5

# TRANSDUCERS AND DIGITAL INSTRUMENTS INCLUDING MODERN RECORDING AND DISPLAYING INSTRUMENTS

5.1 Transducers - Definition and classification. LVDT, Electromagnetic and Ultrasonic flow meters, Piezoelectric transducers-modes of operation-force transducer, Load cell, Strain gauge.

5.2 Oscilloscopes- Principal of operation of general purpose CRO-basics of vertical and horizontal deflection system, sweep generator etc. DSO-Characteristics-Probes & Probing techniques.

5.3 Digital voltmeters and frequency meters using electronic counters, DMM, Clamp on meters.

5.4 Phasor Measurement Unit (PMU) (description only). Introduction to Virtual Instrumentation systems - Simulation software's (description only).

## TRANSDUCER

- Device which when actuated transforms energy from one form to another.
- The input quantity for most instrumentation systems is a 'non- electrical quantity'. In order to use electrical methods and techniques for measurement, manipulation and control, the non-electrical quantity is generally converted into an electrical form by transducers. Physical parameters like mechanical force, heat, light intensity, flow rate, liquid level, etc. may be converted to electrical form by transducers.
- E.g., Photoconductor converts light intensity into change of resistance, thermocouple converts heat energy to electrical voltage, strain gauge converts force to a change in resistance.

Two important parts of a transducer are:

- Sensing or detecting element known as sensor - Responds to a physical phenomenon or a change in a physical phenomenon.
- Transduction element - Transforms the output of a sensing element to an electrical output

Advantages of electrical transducers

- Electrical amplification and attenuation can be done easily even with static devices.
- The effects of friction are minimized.
- Electrical or electronic systems can be controlled with a very small power level.
- The electrical output can be easily used, transmitted and processed for measurement purpose.
- In electrical and electronic signals, inertia effects are due to electron having negligible mass. So mass-inertia effects are minimized.
- Miniaturization due to use of ICs has revolutionized the field of instrumentation.

## CLASSIFICATION OF TRANSDUCER

- On the basis of transduction form used
- Primary and secondary transducers
- Passive and active transducers
- Analog and digital transducers
- Transducers and inverse transducers

On the basis of transduction form used

- Resistive, inductive, capacitive etc. depending on how they convert input quantity into resistance, inductance or capacitance respectively.
- Also, can be classified as piezoelectric, thermoelectric, magneto- strictive, electro-kinetic and optical.

**Types of Electrical Transducers**

| *Electrical parameter and class of transducer* | *Principle of Operation* | *Typical applications* |
|---|---|---|
| | *Passive transducers (externally powered)* | |
| **Resistance** | | |
| Potentiometer device | Positioning of the slider by an external force varies the resistance in a potentiometer or a bridge circuit. | Pressure, displacement. |
| Resistance strain gauge | Resistance of a wire or semiconductor is changed by elongation or compression due to externally applied stress. | Force, torque, displacement. |
| Pirani gauge or hot wire meter | Resistance of a heating element is varied by convection cooling of a stream of gas. | Gas flow, gas pressure. |
| Resistance thermometer | Resistance of pure metal wire with a large positive temperature co-efficient of resistance varies with temperature. | Temperature, radiant heat |
| Thermistor | Resistance of certian metal oxides with negative temperature coefficient of resistance varies with temperature. | Temperature, flow |
| Resistance hygeometer | Resistance of a conductive strip changes with moisture content. | Relative humidity. |
| Photoconductive cell | Resistance of the cell as a circuit element varies with incedent light. | Photosensitive relay. |
| **Capacitance** | | |
| Variable capacitance pressure gauge | Distance between two parallel plates is varied by an externally applied force. | Displacement, pressure. |
| Capacitor microphone | Sound pressure varies the capacitance between a fixed plate and a movable diaphragm. | Speech, music, noise. |
| Dielectric gauge | Variation in capacitance by changes in the dielectric or dielectric constant. | Liquid level, thickness. |
| ***Inductance*** | | |
| Magnetic circuit transducer | Self-inductance or mutual inductance of a.c. excited coil is varied by changes in the magnetic circuit. | Pressure, displacement. |
| Reluctance pick up | Reluctance of the magnetic circuits is varied by changing the position of the iron core of coil. | Pressure, displacement, vibrations, position. |
| Differential transformer | The differential voltage of two secondary windings of a transformer is varied by positioning the magnetic core through an externally applied force. | Pressure, force, displacement, position. |

| Electrical parameter and class of transducer | Principle of Operation | Typical applications |
|---|---|---|
| Eddy current gauge | Inductance of a coil is varied by the proximity of an eddy current plate. | Displacement, thickness. |
| Magnetostriction gauge | Magnetic properties are varied by pressure and stress. | Force, pressure, sound. |
| **Voltage and Current** | | |
| Hall effect pickup | A potential difference is generated across a semiconductor plate (germanium) when magnetic flux interacts with an applied current. | Magnetic flux, current, power |
| Ionization chamber | Electron flow induced by ionization of gas due to radio-active radiation. | Particle counting, radiation. |
| Photoemissive cell | Electron emission due to incident radiation upon photoemissive surface. | Light and radiation. |
| Photomultiplier tube | Secondary electron emission due to incident radiation on photosensitive cathode. | Light and radiation, photosensitive relays. |
| **Self-generating transducers (no external power)** | | |
| Thermocouple and thermopile | An emf is generated across the junction of two dissimilar metals or semiconductors when that junction is heated. | Temperature, heat flow, radiation. |
| Moving coil generator | Motion of a coil in a magnetic field generates a voltage. | Velocity, vibrations. |
| Piezoelectric pickup | An emf is generated when an external force is applied to certain crystalline materials, such as quartz. | Sound, vibrations, acceleration, pressure changes. |
| Photovoltaic | A voltage is generated in a semiconductor junction device when radiant energy stimulates the cell. | Light meter, solar cell |

Primary and secondary transducers

E.g.: Bourdon tube senses pressure and converts it into a displacement of its free end. This displacement moves the core of a LVDT producing an output voltage. First pressure to displacement by Bourdon tube, which acts as primary transducer, and then displacement to voltage by LVDT, which acts as secondary.

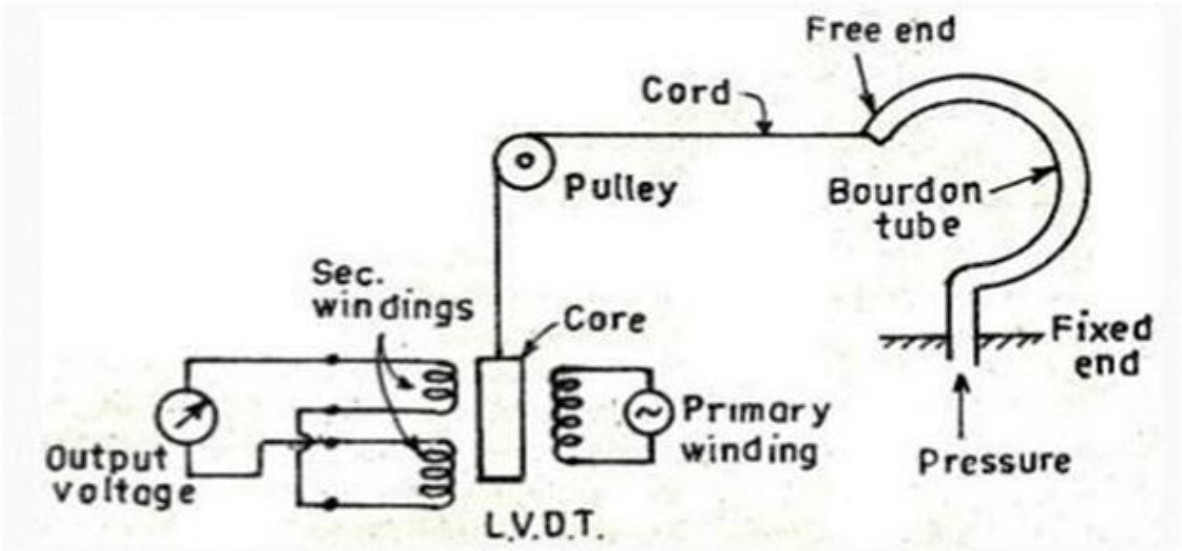

Passive and active transducers

- Passive transducers derive the power required for transduction from an auxiliary power source.
- They also derive part of the power required for conversion from the physical quantity under measurement.
- They are also called externally powered transducers.
- In absence of external power, it cannot work. Hence called passive.
- Examples are resistive, inductive and capacitive transducers.
- A POT is a resistive transducer powered by a voltage source $e_i$ for measuring linear displacement $x_i$. So output voltage, $e_0 = (x_i/L)\, e_i$.

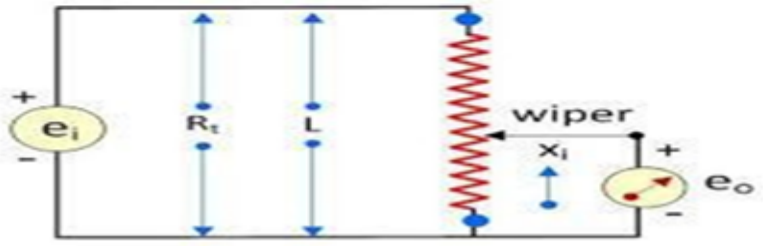


Linear Potentiometer (Pot), a passive transducer

- Active transducers do not require an auxiliary power source to produce their output.
- They are also called self-generating type since they develop their own voltage or current output.
- The energy required for production of output signal is obtained from the physical quantity being measured.
- Velocity, temperature, light intensity and force can be transduced with help of active transducers like tachogenerators, thermocouples, photovoltaic cells and piezoelectric crystals respectively.
- An emf is generated when an external force is applied to certain crystalline piezoelectric materials, such as quartz.

Analog and digital transducers

- Analog transducers convert input quantity into an analog output, which is a continuous function of time. Strain gauge, LVDT, thermocouple, etc. is analog transducers.
- Digital transducers convert input quantity into an electrical output, which is in the form of pulses. Glass scales (with opaque and transparent areas) can be read optically by means of a

light source, an optical system and photocells or Metal scales (non-conducting and conducting areas) are scanned by brushes making electrical contact with individual tracks.

Transducers and inverse transducers

- Transducer converts a non-electrical quantity into an electrical quantity
- Inverse transducer coverts an electrical quantity into non-electrical quantity. E.g., when voltage is applied across the surface of a piezoelectric crystal, it changes its dimensions causing mechanical displacement. Data indicating and recording devices like analog ammeter, voltmeter, pen recorders, oscilloscopes etc. are inverse transducers. As they are placed at output stage, they are also called output transducers. They are mainly used in feedback measuring systems.

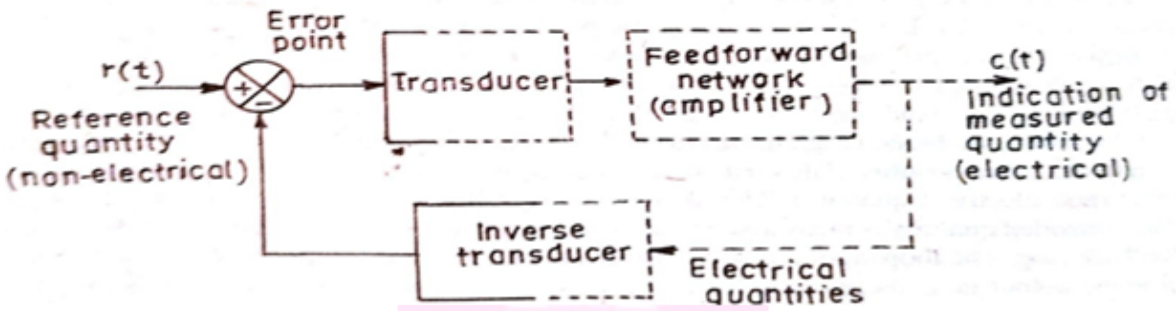


## STRAIN GAUGE

- The amount of deformation a material experiences due to an applied force is called strain. Strain is defined as the ratio of the change in length of a material to the original unaffected length ($\varepsilon = \Delta L/L$)
- Strain gauge is a passive transducer
- Used to sense strain, force, displacement etc.
- If a metal conductor is stretched or compressed, its resistance changes since both length and diameter of it changes. In addition, there is a change in value of resistivity of the conductor when it is strained. This property is called piezoresistive effect. Hence, resistance strain gauges are also called piezoresistive gauges.
- When gauge is subjected to tension (positive strain), its length increases and area of cross section decreases.
- Since resistance is proportional to its length and inversely proportional to its area of cross section, resistance increases with positive strain.
- Strained conductor experiences an increase in resistance due to piezoresistive effect also.

Consider a strain gauge made of circular wire with length L, area A, diameter D and resistivity $\rho$ before being strained.

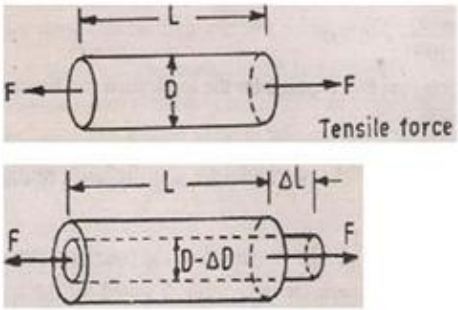


Resistance of unstrained gauge, $R=\rho L/A$

Let tensile stress, s be applied. Now resistance changes by ΔR.

By differentiating R with respect to s, we get,

$$\frac{dR}{ds} = \frac{\rho}{A}.\frac{\partial L}{\partial s} + \rho L.\frac{\partial A}{\partial s}.\frac{-1}{A^2} + \frac{L}{A}.\frac{\partial \rho}{\partial s} \qquad (1)$$

Dividing the equation throughout by $R = \rho L/A$,

$$\frac{1}{R}\frac{dR}{ds} = \frac{1}{L}\frac{\partial L}{\partial s} - \frac{1}{A}\frac{\partial A}{\partial s} + \frac{1}{\rho}\frac{\partial \rho}{\partial s} \qquad (2)$$

$$\frac{1}{A}\frac{\partial A}{\partial s} = \frac{1}{\frac{\pi}{4}D^2}.\frac{\partial}{\partial s}\left(\frac{\pi}{4}D^2\right) = \frac{4}{\pi D^2}.\frac{\pi}{4}.2D.\frac{\partial D}{\partial s} = \frac{2}{D}.\frac{\partial D}{\partial s}$$

$$\frac{1}{R}\frac{dR}{ds} = \frac{1}{L}\frac{\partial L}{\partial s} - \frac{2}{D}\frac{\partial D}{\partial s} + \frac{1}{\rho}\frac{\partial \rho}{\partial s} \qquad (3)$$

Now, Poisson's ratio

$$v = \frac{lateral\ strain}{longitudinal\ strain} = -\frac{\partial D/D}{\partial L/L}$$

$$\frac{1}{R}\frac{dR}{ds} = \frac{1}{L}\frac{\partial L}{\partial s} + v\frac{2}{L}\frac{\partial L}{\partial s} + \frac{1}{\rho}\frac{\partial \rho}{\partial s} \qquad (4)$$

For small variations, $\frac{\Delta R}{R} = \frac{\Delta L}{L} + 2v\frac{\Delta L}{L} + \frac{\Delta \rho}{\rho}$ (5)

Gauge factor is defined as ratio of per unit change in resistance to per unit change in length.

$$G_f = \frac{\Delta R/R}{\Delta L/L} \text{ or } \frac{\Delta R}{R} = G_f.\frac{\Delta L}{L} \text{ or } \frac{\Delta R}{R} = G_f.\varepsilon$$

where $\varepsilon$ = strain $= \frac{\Delta L}{L}$

From equation (5), $G_f$ can be written as

$$G_f = 1 + 2v + \frac{\Delta\rho/\rho}{\varepsilon}$$

If change in value of resistivity is neglected,

$$G_f = 1 + 2v$$

- The strain is usually expressed in terms of microstrain (1 microstrain = 1 $\mu m/m$)
- Strain gauges are used for :
  i. Measurement of strain and associated stress in experimental stress analysis of machines and structures.
  ii. Used as secondary transducers in measurement of displacement, torque, pressure, temperature, acceleration and flow where load cell, torque meters, diaphragm type pressure gauges, temperature sensors, accelerometers, flow meters respectively act as primary transducers.

Types of strain gauges:

a. Unbonded metal strain gauges
b. Bonded wire strain gauges
c. Bonded metal foil strain gauges
d. Evaporation or vacuum deposited thin metal film strain gauges
e. Sputter deposited thin metal strain gauges
f. Semiconductor strain gauges
g. Diffused strain gauges

The unbonded metal strain gauges are most commonly used.

- Resistance may change only a fraction of a percent for the full force range of the gauge. Forces great enough to induce greater resistance changes would permanently deform the gauge.
- In order to use strain gauge as a practical instrument, we must measure even small changes in resistance with high accuracy. Such demanding precision calls for a bridge measurement circuit.

*Full-bridge strain gauge circuit*

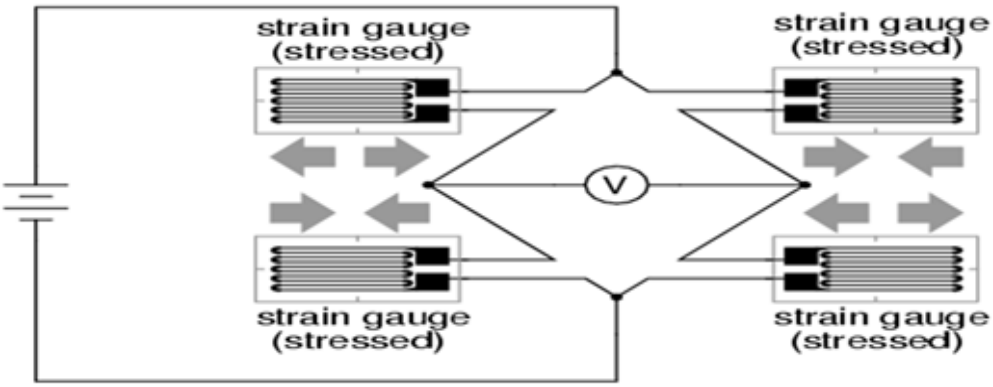

- Strain gauges are selected such that, with no force applied to them, bridge will be symmetrically balanced and voltmeter will indicate zero, representing zero force on strain gauges.
- When force is applied, strain gauges are either compressed or tensed, resulting in increase or decrease of their resistance, thus unbalancing the bridge and producing an indication at voltmeter.
- An unfortunate characteristic of strain gauges is that of resistance change with changes in temperature. We can solve this problem in a full- bridge circuit because all the elements of the arms will change resistance in the same proportion when temperature changes, thus cancelling the effects of temperature change.

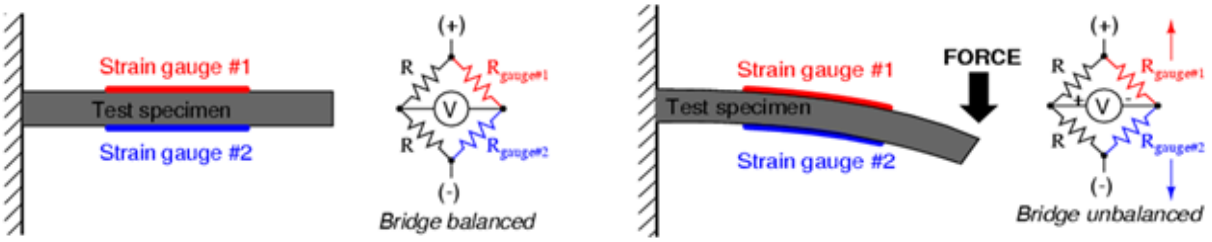


- With no force applied to the test specimen, both strain gauges have equal resistance and bridge circuit is balanced. However, when a downward force is applied to free end, it will bend downward, stretching gauge 1 and compressing gauge 2 at the same time.
- Full-bridge configuration is the best, since it is linear. With a full-bridge, output voltage is directly proportional to applied force.

## LINEAR VARIABLE DIFFERENTIALTRANSFORMER

LVDT is an inductive transducer, which translates linear motion into electrical signals.

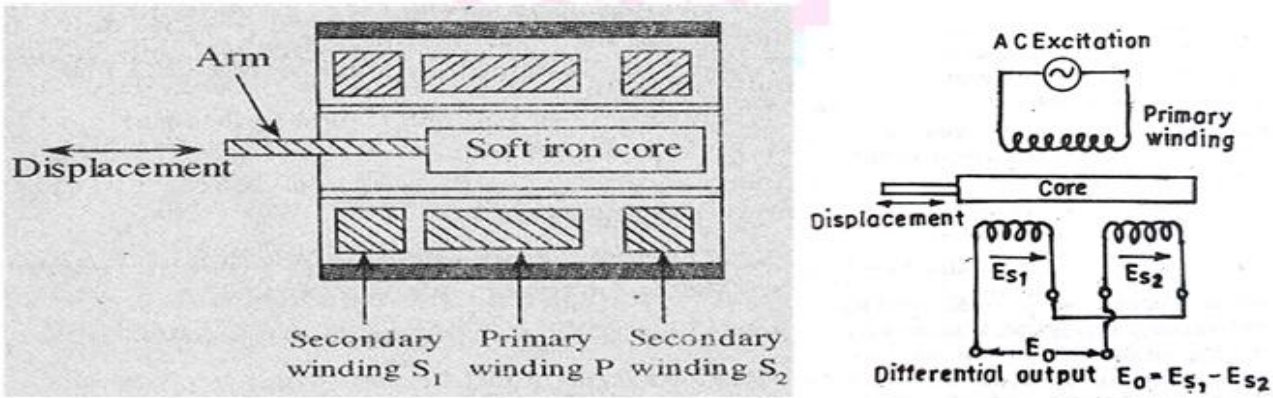


- Transformer has a single primary winding P and two secondary windings $S1$ and $S2$ wound on a cylindrical former.
- Secondary windings have equal number of turns and are identically placed on either side of the primary winding.
- The primary winding is connected to an AC source.

- A movable soft iron core is placed inside the former.
- The displacement to be measured is applied to the arm attached to the soft iron core. Core is of high permeability nickel iron which is hydrogen annealed for low harmonics, high sensitivity and low null voltage. This is slotted longitudinally to reduce eddy current losses.
- Assembly is placed in stainless steel housing and end lids provide electrostatic and electromagnetic shielding.
- Since the primary winding is excited by an alternating current source, it produces an alternating magnetic field, which in turn induces AC voltages in the two secondary windings.
- The output voltage of secondary $S1$ be $ES1$ and of secondary $S2$ be $ES2$.
- $S1$ and $S2$ are connected in series opposition.
- Hence, output voltage is difference of these two voltages.
- Differential output voltage, $E_0 = ES1 - ES2$.
- When core is at null position, fluxes linking with both secondary windings are equal and hence equal emfs are induced in them. Thus $ES1 = ES2$. Hence, $Eo$ is zero.
- If core is moved to left, more flux links with $S1$ than $S2$. Hence, $ES1 > ES2$. So magnitude of $Eo = ES1 - ES2$ and output voltage is in phase with primary voltage.
- If core moves to right, more flux links with $S2$ than $S1$. $ES2 > ES1$. Therefore, $Eo$ is negative and $180^0$ out of phase with primary voltage.
- Amount of voltage change in either secondary is proportional to amount of movement of the core.
- By noting which output voltage is increasing or decreasing, we can determine the direction of motion.
- Difference of two voltages appears across output terminals and gives measure of physical position of core and hence displacement.
- By comparing magnitude and phase of output voltage with source, amount and direction of core movement and hence displacement can be determined.
- The output voltage is a linear function of core displacement within a limited range of 5mm from null position. Beyond this range of displacement, curve starts to deviate from straight line.

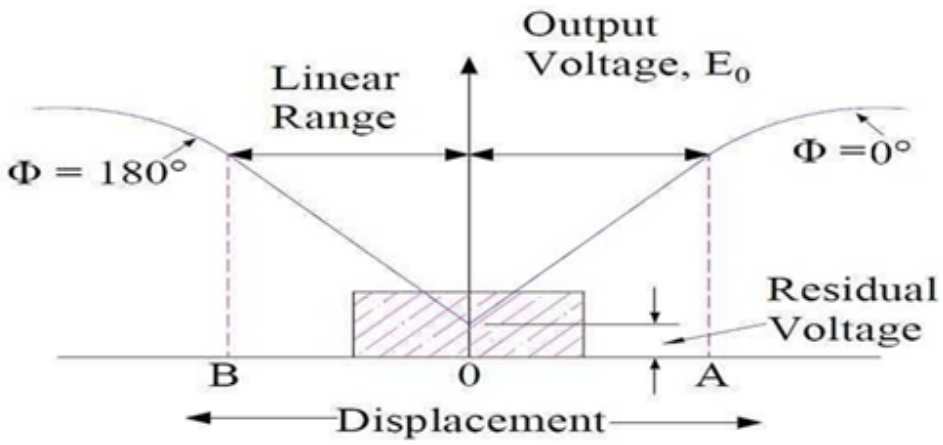


- Ideally, at null position, output should be zero.
- However, in actual practice, there exists a small voltage at null position.
- It may be due to presence of harmonics in input supply voltage or due to harmonics produced in output voltage because of use of iron core.
- Other causes of residual voltage are stray magnetic fields and temperature effects.
- There may be either an incomplete magnetic or electrical unbalance or both which result in a finite output voltage at null position which is generally less than 1% of maximum output voltage in linear range.
- Using better ac sources, residual voltage can be reduced.

**ADVANTAGES OF LVDT**

- High range for measurement of displacement.
- Frictionless operation and electrical isolation as LVDT is an electrical transformer with separable non-contacting core.
- Infinite resolution as LVDT can respond to even minute motion.
- Immunity from external effects.
- High output and high sensitivity - no need of amplification.
- Ruggedness - can tolerate high degree of shock and vibrations.
- Low hysteresis and hence excellent repeatability.
- Low power consumption (less than 1 W).
- Simple construction. Also small and light in weight. Hence, they are stable and easy to align and maintain.

## DISADVANTAGES OF LVDT

- Relatively large displacements are required for appreciable differential output.
- Sensitive to stray magnetic fields but shielding is possible.
- Vibrations can affect performance.
- Receiving instrument must be selected to operate on ac signal or demodulator network must be used if a dc output is required.
- Dynamic response is limited mechanically by mass of core and electrically by frequency of applied voltage.
- Temperature affects the performance. Manganin wire can be used instead of copper for avoiding temperature effects at an expense of lowering sensitivity. Temperature also causes phase shifting effects, which may be minimized by using a capacitor across one of the secondary windings.

## APPLICATIONS OF LVDT

- For measurement of displacement which is converted directly to an electrical output by LVDT acting as primary transducer.
- Used as secondary transducer for measurement of force, weight, pressure etc.

## PIEZO-ELECTRIC TRANSDUCER

- A piezo-electric material is one in which an electric potential appears across certain surfaces of a crystal if dimensions of crystal are changed by application of a mechanical force. This potential is produced by displacement of charges.
- The effect is reversible. Therefore, if a varying potential is applied to proper axis of crystal, it will change the dimensions of crystal thereby deforming it. This effect is known as piezo-electric effect.
- Elements exhibiting piezo-electric qualities are called electro resistive elements.
- Common piezoelectric materials include Rochelle salts, ammonium dihydrogen phosphate, lithium sulphate, dipotassium tartarate, potassium dihydrogen phosphate, quartz and ceramics A and B.

- Except for quartz and Rochelle salts, rest are manmade crystal grown from aqueous solutions under carefully controlled conditions.
- Ceramic materials are polycrystalline in nature. They are made of barium titanate. They do not have piezoelectric properties in their original state but are produced by special polarizing treatment.
- Materials that exhibit piezoelectric effect are divided into two categories: Natural group and synthetic group.
- Quartz and Rochelle salt belong to natural group while materials like lithium sulphate, ethylene diamine tartarate belong to synthetic group.

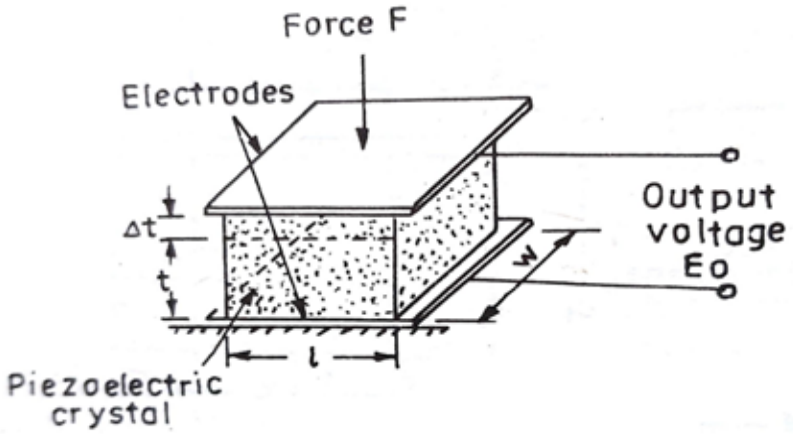


- A piezo-electric element used for converting mechanical motion to electrical signals may be thought as charge generator and capacitor. Mechanical deformation generates a charge, which appears as voltage across electrodes. ($E = Q/C$)
- Piezo-electric effect is direction sensitive. A tensile force produces a voltage of one polarity while a compressive force produces a voltage of opposite polarity. Magnitude of induced surface charges is proportional to magnitude of applied force. Polarity of induced charges depends on direction of applied force.

Charge $Q = d\,.\,F$ coulomb

$d$: charge sensitivity of the crystal (constant for a crystal), $C/N$

$F$: applied force, $N$

The force $F$ causes a change in thickness of the crystal

$F = \frac{AE}{t}\,\Delta t$ newton

$A$: area of crystal, $m^2$

$t$: thickness of crystal, $m$

$E$: Young's modulus, $N/m^2$

Young's modulus

$$E = \frac{stress}{strain} = (F/A).\frac{1}{\Delta t/t} = \frac{Ft}{A\Delta t}\ N/m^2$$

$$Q = d.AE(\Delta t/t)$$

The charge at the electrodes gives rise to an output voltage $E_o$

Voltage $E_o = Q/C_p$

where $C_p$ :capacitance between electrodes

Capacitance between electrodes, $C_p = \epsilon A/t$

$$E_o = \frac{Q}{C_p} = \frac{dF}{\epsilon A/t} = \frac{d.t}{\epsilon}.\frac{F}{A}$$

But $F/A = P$ =pressure or stress in $N/m^2$

$$E_o = \frac{d.t}{\epsilon}.P = g.t.P$$

$g$ is the voltage sensitivity of the crystal. This is constant for a given crystal cut. $g = (d/\epsilon) = (d/\epsilon_r.\epsilon_0)$ $Vm/N$

$$g = \frac{E_o}{tP} = \frac{E_o/t}{P} = \frac{electric\ field}{stress} = \frac{\varepsilon}{P}$$

- Crystal voltage sensitivity, $g$ is defined as ratio of electric field intensity to pressure (or stress). Unit is Vm/N.
- Charge sensitivity, $d = \epsilon g = \epsilon_0\epsilon_r g$ C/N
- Piezo-electric effect can be made to respond to mechanical deformations of material in different modes like:
  - thickness shear
  - face shear
  - thickness expansion
  - transverse expansion

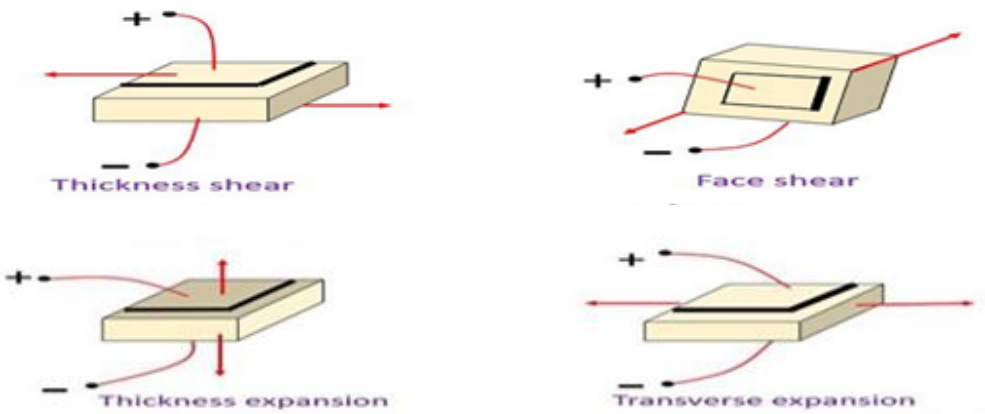


Equivalent circuit of piezo-electric transducer

Source is a charge generator, $Q = dF$

Charge generated is across capacitance, $Cp$ and its leakage resistance, $Rp$.

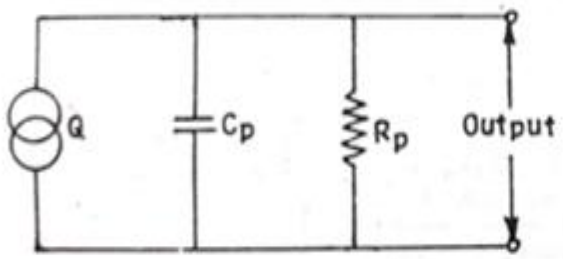


Charge generator can be replaced by an equivalent voltage source having voltage of $Eo = Q/Cp = dF/Cp$ in series with capacitance, $Cp$ and resistance, $Rp$.

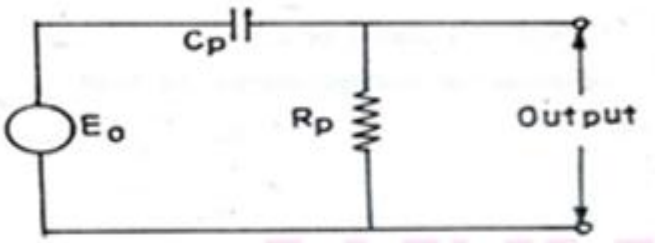


## LOAD CELL

- Load cell is a short column or a strut with resistance wire strain gauges bonded to it.
- When force is applied to column, a strain is produced. Hence, it acts as primary transducer. This strain changes resistance of strain gauges which acts as secondary transducers.

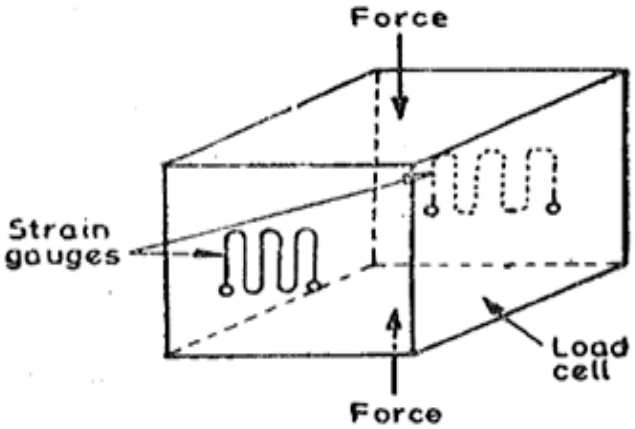


Force measurement with load cell and strain gauges.

- Load cells utilise an elastic membrane as the primary transducer and strain gauges as the secondary transducers.
- Strain gauges may be attached to any elastic member on which there exists, a suitable plane area to accommodate them.

- This arrangement may be used to measure loads applied to deform or deflect the member, if the resultant strain is large enough to produce detectible outputs.
- When strain gauge - elastic member combination is used for weighing, it is called a load cell.
- A tensile-compressive cell in the form of a cylinder has four strain gauges each mounted at $90^0$ to each other.
- Two of the strain gauges experience tensile stress while the other two are subjected to compressive stress.

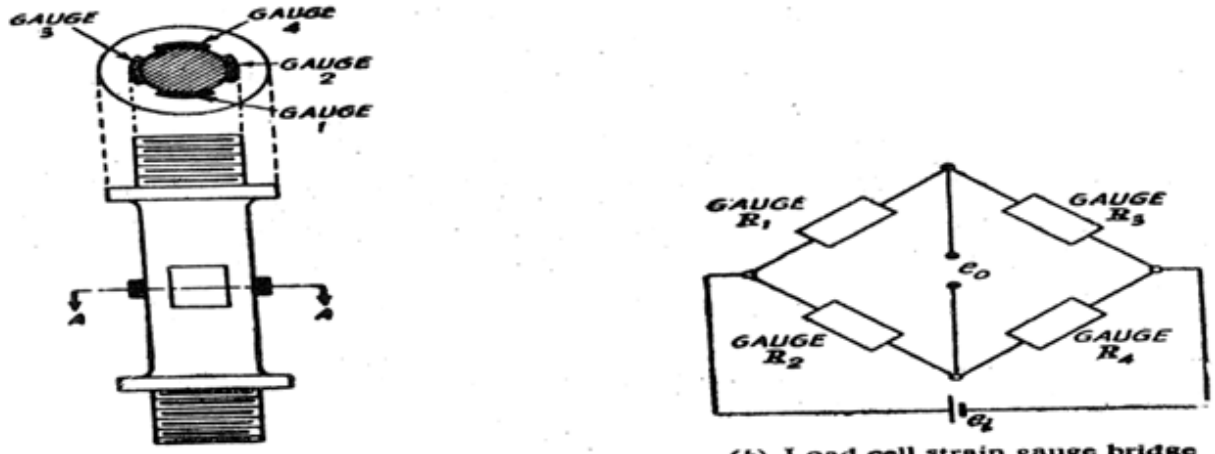


(a) Load cell (b) Load cell strain gauge bridge

- In case of cylinder, an axial compressive load causes negative strain in vertical gauges and a positive strain in circumferential gauges.
- These two strains are not equal and are related to each other by Poisson's ratio ($\upsilon$).
- When all gauges are similar, temperature compensation is obtained as all the gauges contribute equally to unbalance the bridge.
- The output of a bridge with equal arms and using two sets of strain gauges mounted $90^0$ to each other, with one set experiencing tensile stress while the other a compressive stress is:

$$\Delta e_o = 2(1+\upsilon)\left[\frac{\Delta R_1/R}{4+2(\Delta R_1/R)}\right] e_i$$

## MEASUREMENT OF FLOW

### Electromagnetic Flow Meters

- Particularly suitable for flow measurements of slurries, sludge and any electrically conducting liquid.
- Consists of a pair of insulated electrodes buried flush in opposite sides of a non-conducting, non-magnetic pipe carrying liquid whose flow is to be measured.

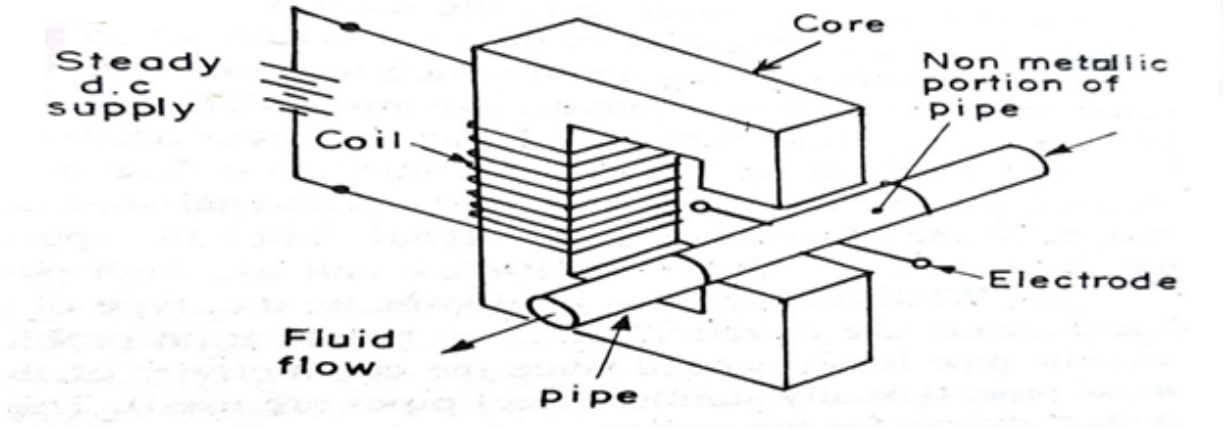


- Pipe is surrounded by an electromagnet, which produces a magnetic field.
- The arrangement is analogous to a conductor moving across a magnetic field.
- Therefore, voltage is induced across electrodes, $E = Blv$ volt.
- Assuming a constant magnetic field, magnitude of voltage appearing across electrodes will be directly proportional to velocity.
- Nonconducting pipe has to be used as output voltage gets short-circuited if metallic pipes are used.
- Meter relies on a high gain amplifier to convert induced voltage into usable form.

Advantages

- Can measure flow in pipes of any size provided powerful magnetic field can be produced.
- No obstruction to flow that may cause pressure drops.
- Output (voltage) is linearly rated to the input (flow rate).
- Output is unaffected by changes in characteristics of liquid such as viscosity, pressure and temperature.

Disadvantages

- Operating costs are high particularly if heavy slurries are handled.
- Conductivity of liquid being metered should not be less than $10\mu\Omega/m$.

Ultrasonic Flow Meters

- Consists of two piezoelectric crystals in liquid or gas separated by a distance.
- One of the crystal acts as a transmitter and other as a receiver.
- Transmitter emits an ultrasonic pulse, which is received at receiver a time $\Delta t$ later.

- The transit time in the direction of flow is:

$$\Delta t_1 = \frac{d}{c+v}$$

$d$: distance between transmitter and receiver; m
$c$: velocity of sound propagation in medium; m/s
$v$: linear velocity of flow; m/s

- When signal is travelling in opposite direction against flow

$$\Delta t_2 = \frac{d}{c-v}$$

- Similarly, a sinusoidal signal of frequency $f$ $Hz$ travelling in the flow direction has a phase shift of:

$$\Delta\phi 1 = 2\pi f d/\ (c+v)\ \text{rad}$$

and that travelling against the direction of flow has a phase shift of:

$$\Delta\phi 2 = 2\pi f d/\ (c-v)\ \text{rad}$$

- Velocity can be determined by either measuring the transit time or the phase shift.

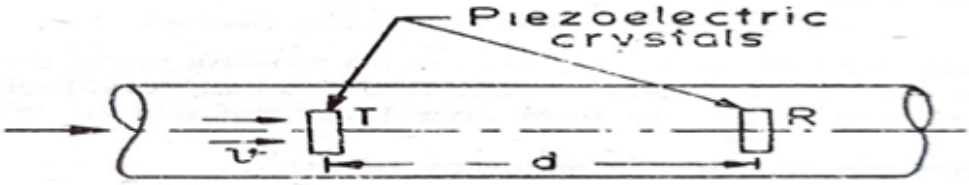


- This is a system, which can be used external to pipe carrying liquid.
- T and R are transmitting and receiving crystals respectively.
- They are either pressed to the exterior of pipe or are immersed in liquid so that the signal is transmitted through the liquid.
- Oscillator provides sinusoidal signal of about 100 $kHz$ to crystal, T while crystal, R acts as receiver.
- Function of T and R are reversed periodically by commutating switch.
- Difference in transmit times is

$$\Delta t = \Delta t_2 - \Delta t_1 = \frac{2dv}{c^2-v^2} \approx \frac{2dv}{c^2} \quad (c \gg v)$$

- Hence, time $\Delta t$ is linearly proportional to flow velocity, $v$, but the system is subject to an error because of uncertainty of value of $c$.

- A frequency-based system can be used which has two self excited oscillating systems using received pulses to trigger transmitted pulses in feedback arrangement.

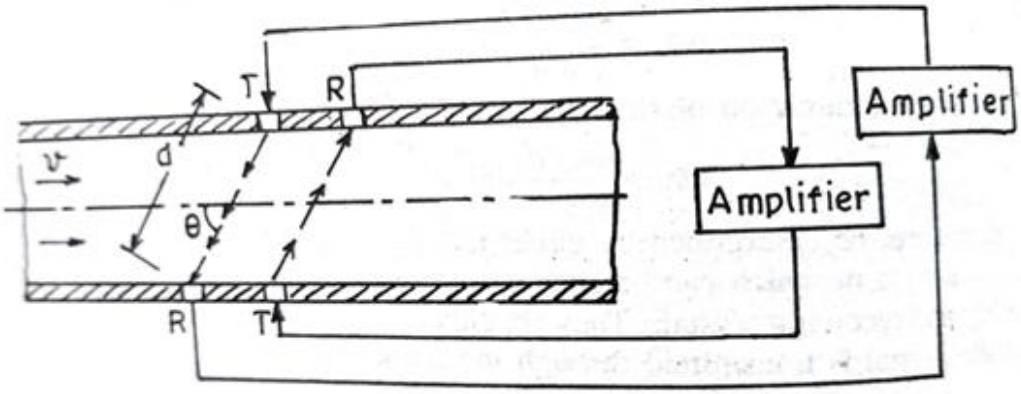


$$\Delta t_1 = \frac{d}{(c+v\cos\theta)} \quad or \quad f_1 = \frac{c+v\cos\theta}{d}$$

$$\Delta t_2 = \frac{d}{(c-v\cos\theta)} \quad or \quad f_2 = \frac{c-v\cos\theta}{d}$$

- Hence difference in frequency,

$$\Delta f = f_1 - f_2 = \frac{2\,v\cos\theta}{d}$$

- Hence, output is independent of c. In addition, output is linearly proportional to flow velocity, v.

Advantages

- No obstruction to flow that may cause pressure drops.
- Linear relationship between input and output.
- Insensitive to variations in viscosity, density and temperature.
- No moving parts.
- Excellent dynamic response.
- They lend themselves to bidirectional flow.

Disadvantages

- Complex
- Relatively high cost.

## CATHODE RAY OSCILLOSCOPE

- Cathode ray oscilloscope (CRO) is a type of electrical instrument, which is, used for showing the measurement and analysis of waveforms and other electronic and electrical phenomenon.
- It is a very fast X-Y plotter, which shows the input signal versus another signal or versus time. The CROs are used to analyze the waveforms, transient and other time-varying quantities from a very low frequency range to the radio frequencies.
- It is used for measuring electrical characteristics like voltage, current, frequency, phase etc.
- The heart of the oscilloscope is Cathode ray tube (CRT).

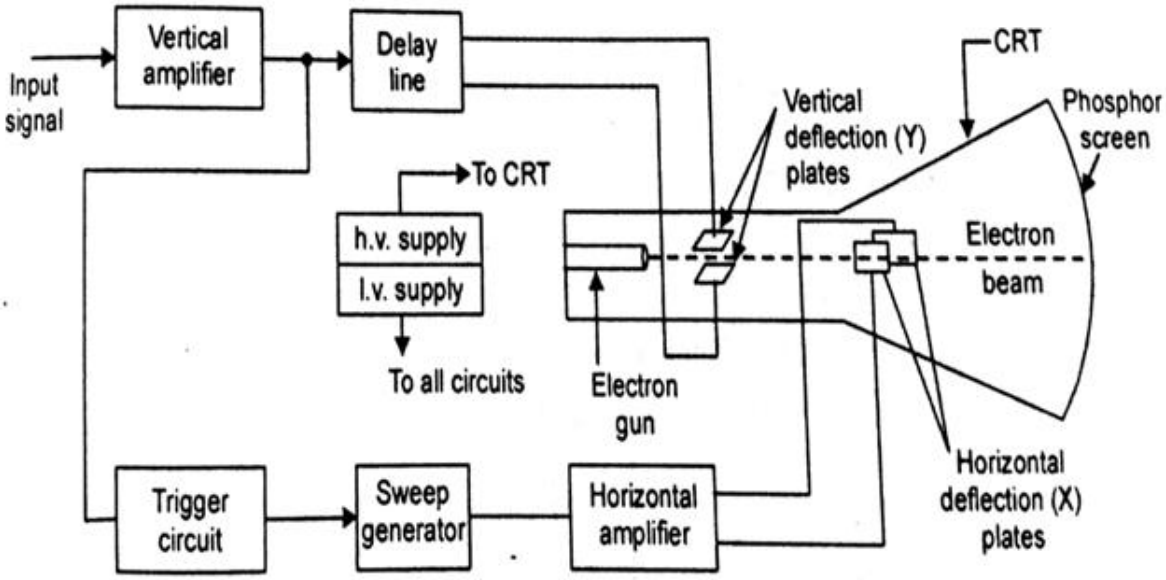


The important blocks are:

1. Cathode ray tube (CRT)
2. Vertical amplifier
3. Delay line
4. Sweep or time base generator
5. Horizontal amplifier
6. Trigger circuit
7. Power supply

- In **Cathode ray tube (CRT)**, the electrons are emitted from an electron gun and is shaped into a fine beam and accelerated towards a fluorescent phosphor screen. The screen produces a visible spot where the electron beam strikes.
- Voltages applied to deflection plates deflect the beam vertically and horizontally. The vertical deflecting plates move the beam vertically up and down. The horizontal deflecting plates move the beam sideways. By properly applying the potentials on the deflecting plates, the electron beam can be made to strike at any part of the fluorescent screen.

- Input signal is given to vertical input terminals (Y terminals) of the CRO. **Vertical amplifier** amplifies this signal. The gain of this amplifier is controlled by voltage division knob. Output of vertical amplifier is applied to vertical deflecting plate via delay line.

- **Time base generator or sweep generator** produces a saw tooth waveform. The rate of rise of positive going part of saw tooth waveform is controlled by time division knob. The time base generator output is amplified by **horizontal amplifier** and is given to horizontal deflecting plates (X plates). Application of voltage to horizontal deflecting plates makes the spot on the screen to execute motion from left to right.

- The **trigger circuit** controls the instants at which the sweep voltage is to be applied to the horizontal deflecting plates.
- **Delay line** retards the arrival of input waveform at the vertical deflection plates until the trigger and time base circuit starts the sweep of the beam. Usually it produces a delay of 0.25 micro seconds.

- When the input signal is applied to the vertical deflecting plates and the sweep generator output is applied to the horizontal deflecting plates, the electron beam (spot on screen) traces a path on the screen of the CRO, which represents the variation of the input signal with respect to time.

- There are two **power supply** stages. One is called the High Voltage (H.V.) supply, which supplies power to the electrodes of the CRT. The other power supply called the Low Voltage Supply (L.V.) is meant for supplying the power to other devices used in the CRO.

## CATHODE RAY TUBE(CRT)

- It is a vacuum tube of special geometrical shape, which converts an electrical signal into visual one.

- A CRT makes available a large number of electrons, which are accelerated to high velocity and brought to focus on a fluorescent screen where it produces a visible spot.

- The electron beam is deflected during its journey in response to the applied electric signal.

- It consists of three basic components:
  - Electron gun
  - Deflection system
  - Fluorescent screen

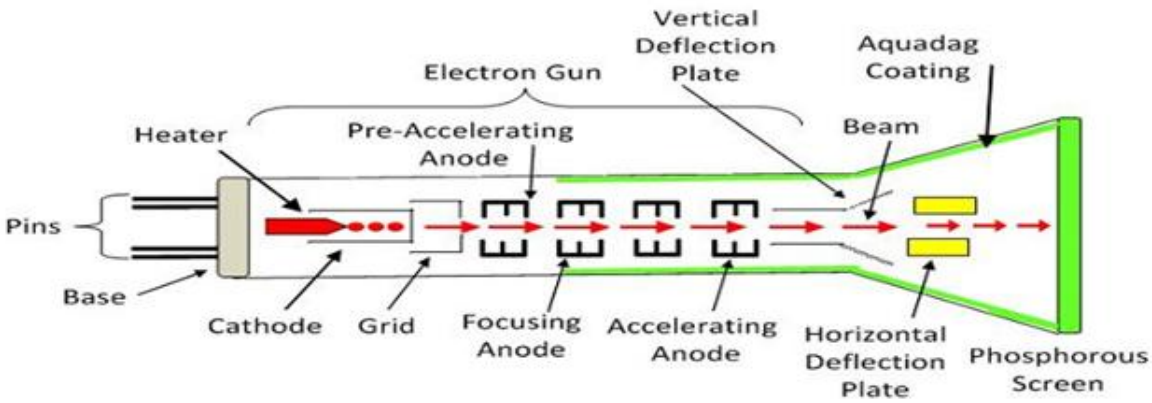


The electron gun assembly consists of an indirectly **heated cathode**, a **grid** structure and **anodes** that deflect and focus the beam. The **cathode** is surrounded by control grid made of nickel cylinder. The heated cathode emits electrons. The grid is maintained at a negative potential with respect to the cathode.

- Under the influence of the **grid**, the electrons are prevented from diverging and they pass through the hole in the grid structure. The electrons that are capable of passing through the grid structure's hole travel along the axis of the tube and they contribute the beam current. Magnitude of beam current is dependent on grid voltage.
- If negative potential on control grid is high, fewer electrons will pass through it. Hence, electron beam will produce a dim spot of light on striking the screen. Reverse will happen when the negative potential on control grid is reduced. Therefore, intensity of light spot can be controlled by changing the negative potential of the control grid.
- CRT consists of three anodes - Pre-accelerating, focusing and accelerating anodes.
- Electrons after passing grid will not be having sufficient velocities to reach the screen. Hence, they are to be accelerated. For this purpose, **pre-accelerating and accelerating anodes** are used.
- As beam contains electrons that repel each other, the beam tend to diverge. To prevent this, a **focusing anode** is used. Process of converging electrons into fine beam using anode is called focusing.

- Working is based on electrostatic focusing. Since pre-accelerating and accelerating anodes are at high positive potential, they produce a field, which act as electrostatic lens to converge beam at a point on the screen.

- In its journey from electron gun, the electron beam passes through a pair of vertical and horizontal deflecting plates. The vertical deflecting plates move the beam vertically up and down. The horizontal deflecting plates move the beam sideways. By properly applying the potentials on deflecting plates, the electron beam can be made to strike at any part of the fluorescent screen.

- When no voltage is applied to the deflection plates, electron beam produces a spot light at the centre 'O'.

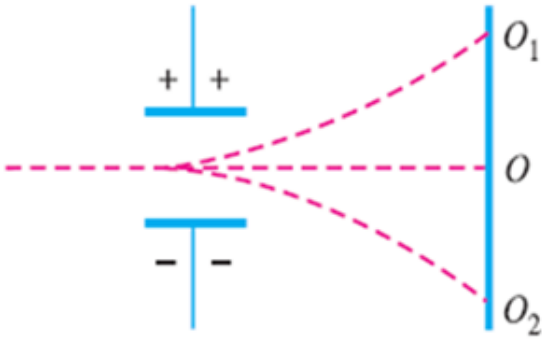


- If voltage is applied only to vertical deflection plates, spot light will deflect upwards ($O_1$).

- If the voltage is reversed, spot light will deflect downwards ($O_2$).

## APPLICATIONS OF CRO

1. Voltage Measurement

By measuring the peak to peak voltage and counting the number of division, we can find the value of voltage. The amplitude is half of peak to peak voltage.

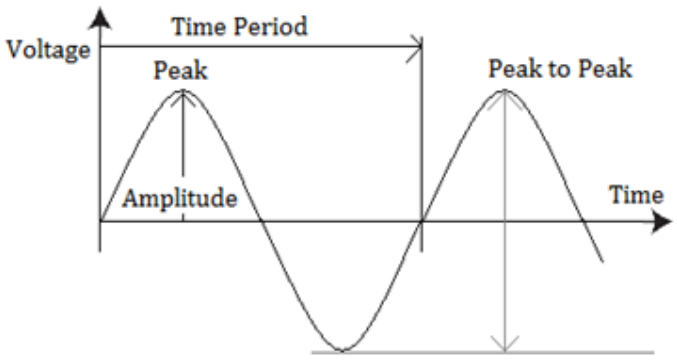

2. Current Measurement

CRO has very high input impedance and cannot be used for direct measurement of current. However, the current can be measured in terms of voltage drop across a standard resistance.

$$\text{current, } I = \frac{V\,(\text{measured on CRO})}{R}$$

3. Time and Frequency Measurement

Time is shown on the horizontal axis and the scale is determined by the time base (time/cm) control. The time period (or period) is the time for one cycle of the signal. The frequency is the number of cycles per second.

$$\text{frequency} = \frac{1}{\text{time period}}$$

It also can be measured by using Lissajous patterns.

4. Phase Measurement

It can be measured by using Lissajous patterns.

**XY MODE**

- Consider a voltage waveform Vy(t) as a function of another waveform Vx(t) with same frequency, then the elimination of parameter t is desired for which we are going for XY mode of operation.
- Here one signal is applied to vertical deflection plate and the other is applied to horizontal deflection plate.
- XY button on the front panel is used to select this mode, which disconnects the trigger signal and connects the second input waveform.
- The pattern formed by graph is called **Lissajous patterns.**

**LISSAJOUS PATTERNS**

- Lissajous pattern method is the quickest method of measuring frequency.
- In this method, the standard known frequency signal is applied to horizontal plates and simultaneously unknown frequency signal is applied to the vertical plates. Such patterns obtained by applying simultaneously two different sine wave to horizontal and vertical plates are called Lissajous figures or Lissajous patterns.

- The shape of the Lissajous pattern depends on the frequency and phase relationship of the two sine waves.
- In general, the shape of Lissajous figure depends on amplitude, phase difference and ratio of frequency of the two waves.
- Two sine waves of the same frequency and amplitude may produce a line, an ellipse or a circle depending on their phase difference.

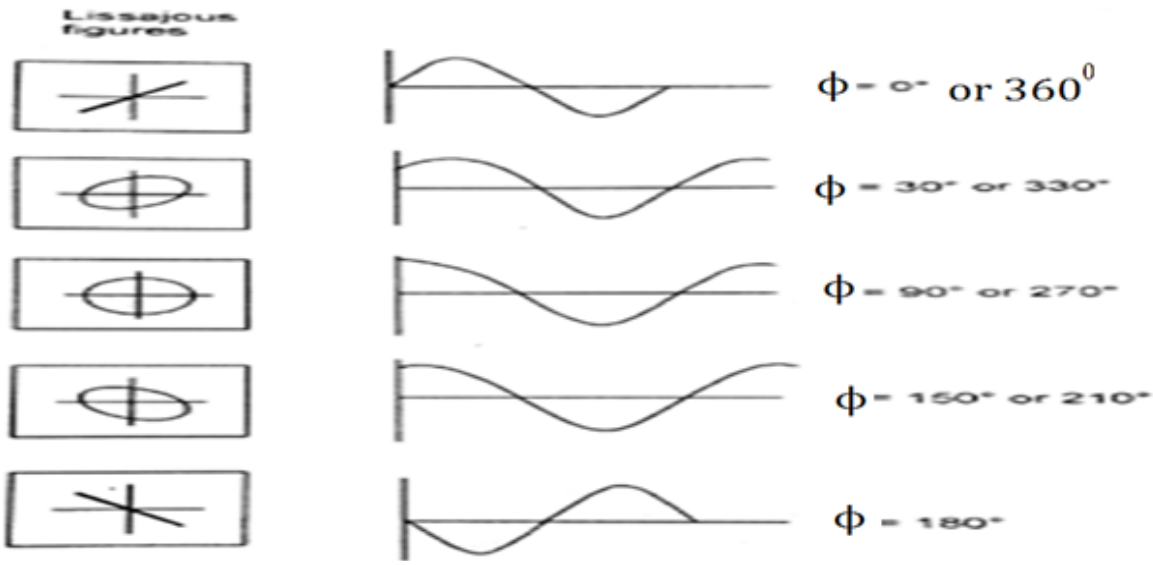


Consider Lissajous figure obtained on CRO with an unknown phase difference Φ with frequency and amplitude of two waves being same.

$0 < \phi < 90^\circ$ or $270^\circ < \phi < 360^\circ$ $\qquad$ $90^\circ < \phi < 180^\circ$ or $180^\circ < \phi < 270^\circ$

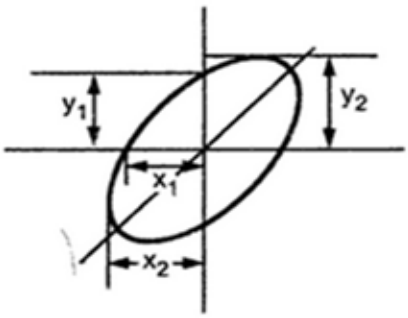


Figure (a)

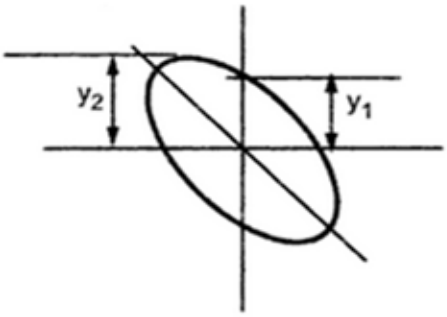


Figure (b)

The parameters $X_1$, $X_2$ or $Y_1$, $Y_2$ can be measured from the figure (a).

The phase angle then can be obtained as, $\sin\phi = \frac{Y_1}{Y_2} = \frac{X_1}{X_2}$

$$\phi = \sin^{-1}\left(\frac{Y_1}{Y_2}\right) = \sin^{-1}\left(\frac{X_1}{X_2}\right) \quad \text{or } 360 - \phi.$$

If pattern is obtained as shown in figure (b) then phase angle Φ is

$$\phi = 180^0 - \sin^{-1}\left(\frac{Y_1}{Y_2}\right) \quad \text{or } 360 - \phi.$$

Consider two waves with same amplitude and phase, but with different frequencies.

**To determine the ratio of frequencies** of signals applied to the vertical and horizontal deflecting plates by using Lissajous pattern, simply draw arbitrary horizontal and vertical line on Lissajous pattern intersecting the Lissajous pattern. Now count the number of horizontal and vertical tangencies with the horizontal and vertical lines. Then ratio of frequencies of signals applied to deflection plates,

$$\frac{\omega_y}{\omega_x} = \frac{f_y}{f_x} = \frac{Number\ of\ horizontal\ tangencies}{Number\ of\ vertical\ tangencies}$$

$$= \frac{(Number\ of\ intersections\ of\ lissajous\ pattern\ with\ horizontal\ line)}{(Number\ of\ intersections\ of\ lissajous\ pattern\ with\ vertical\ line)}$$

**Examples**

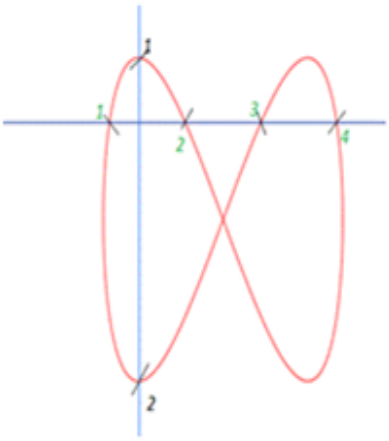

$f_y/f_x = 4/2 = 2$

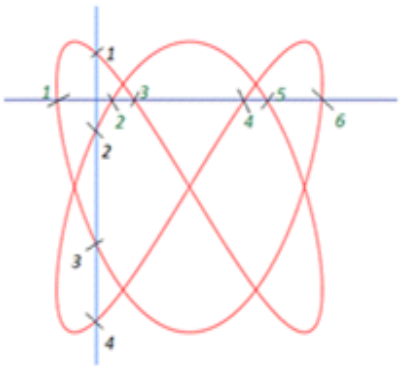

$f_y/f_x = 6/4 = 3/2$

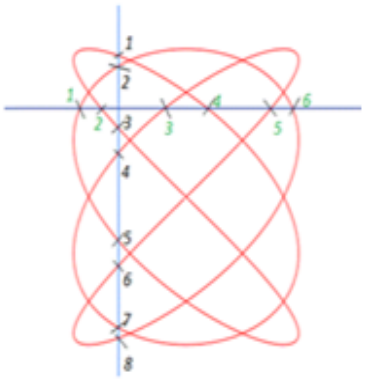

$f_y/f_x = 6/8 = 3/4$

**Another method:**

$$\text{Frequency ratio} = \frac{\text{Number of positive peaks}}{\text{Number of right-hand side peaks}}$$

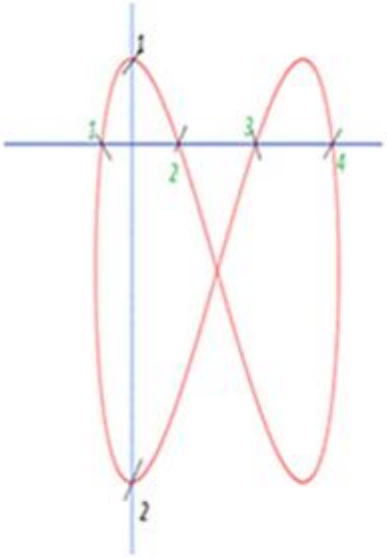

$f_y/f_x = 2/1 = 2$

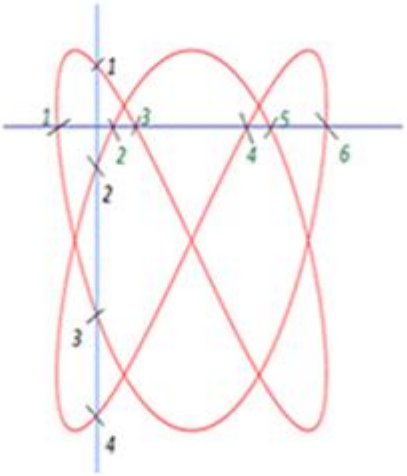

$f_y/f_x = 3/2$

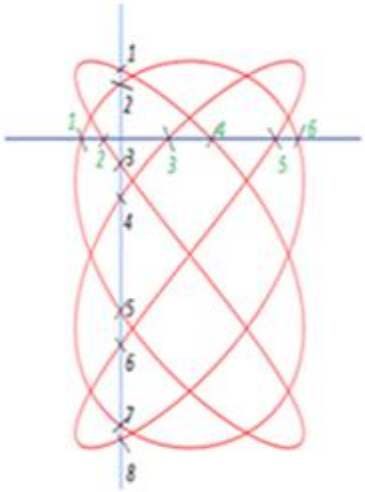

$f_y/f_x = 3/4$

## DIGITAL STORAGE OSCILLOSCOPE(DSO)

- Analog oscilloscopes fail to perform well for displaying high frequency signals. Higher input frequency causes electron beam to move fast across the screen and hence only a faint trace is obtained.

- Digital storage oscilloscopes (DSO) perform much better than analog oscilloscope in high frequency applications.

- DSO provides additional functions such as storage of signals, analyze parameters of waveforms such as rise time, fall time, mean value, rms value, etc. and digital display of numerical values. They have facility to interface with computers and printers for further processing, storage or taking print out.

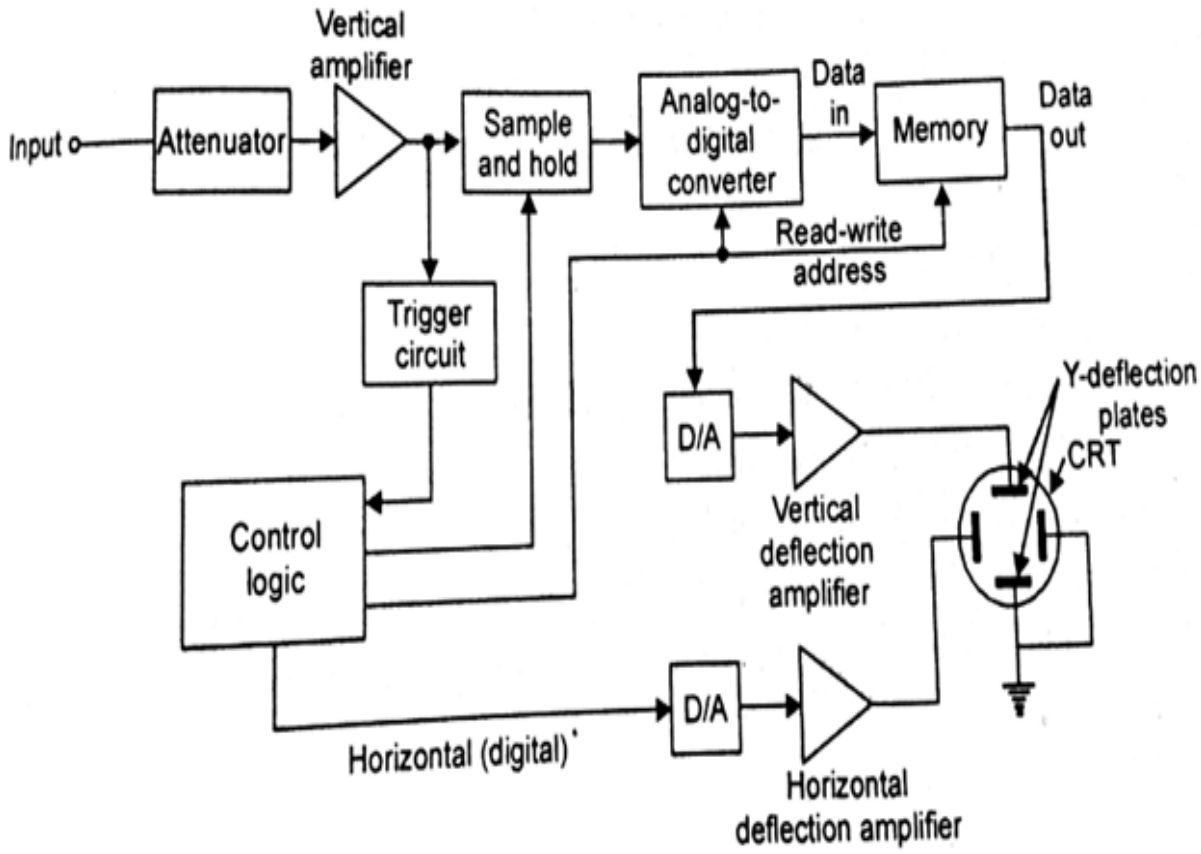

- The signal to be observed is first applied to input attenuator and amplifier. High amplitude signals are attenuated and low amplitude signals are amplified to desired value.
- This signal is digitized using sampling circuit and ADC. Sampling is the process of taking the values of the waveform at regular intervals. The rate of sampling should be at least twice as fast as the highest frequency present in the input signal, according to sampling theorem. The successive approximation type of A/D converter is commonly used in digital storage oscilloscopes. The sampling rate and memory size are selected depending upon the duration and the waveform to be recorded.
- The digital values are stored in memory.
- A control logic circuit is used to control the operations of the sample and hold, ADC and memory. The control logic also drives the horizontal sweep DAC and the horizontal deflection amplifier.
- Digital signal stored in memory is to be converted to analog form for displaying it. The digital-to-analog converter (DAC) converts each digital sample back to analog form and passes it to the vertical deflection amplifier.
- The combined action of the deflection plates produces display on the screen.

Once it is stored in memory, many manipulations are possible as memory can be readout without being erased.

The digital storage oscilloscope has three modes:

1. **Roll mode** - used to observe fast and varying signals.
2. **Store mode** - most commonly used mode, once trigger pulse is obtained, memory write cycle is initiated.
3. **Hold or save mode** – In modern digital storage oscilloscope operating on automatic refresh system, when new sweep signal is obtained – new content is overwritten and previous is erased.

**Advantages**

- It is easier to operate and has more capability.
- The storage time is infinite.
- The display flexibility is available. The number of traces that can be stored and recalled depends on the size of the memory.

- The cursor measurement is possible. The characters can be displayed on screen along with the waveform which can indicate waveform information such as minimum and maximum frequency, amplitude etc.
- The X-Y plots, B-H curve, P-V diagrams can be displayed.
- The pre-trigger viewing feature allows displaying the waveform before trigger pulse.
- Keeping the records is possible by transmitting the data to computer system where the further processing is possible.
- Signal processing is possible which includes translating the raw data into finished information e.g. computing parameters of a captured signal like r.m.s. value, energy stored etc.